DRAWING NO
MP50951

www.PumpAgents.com

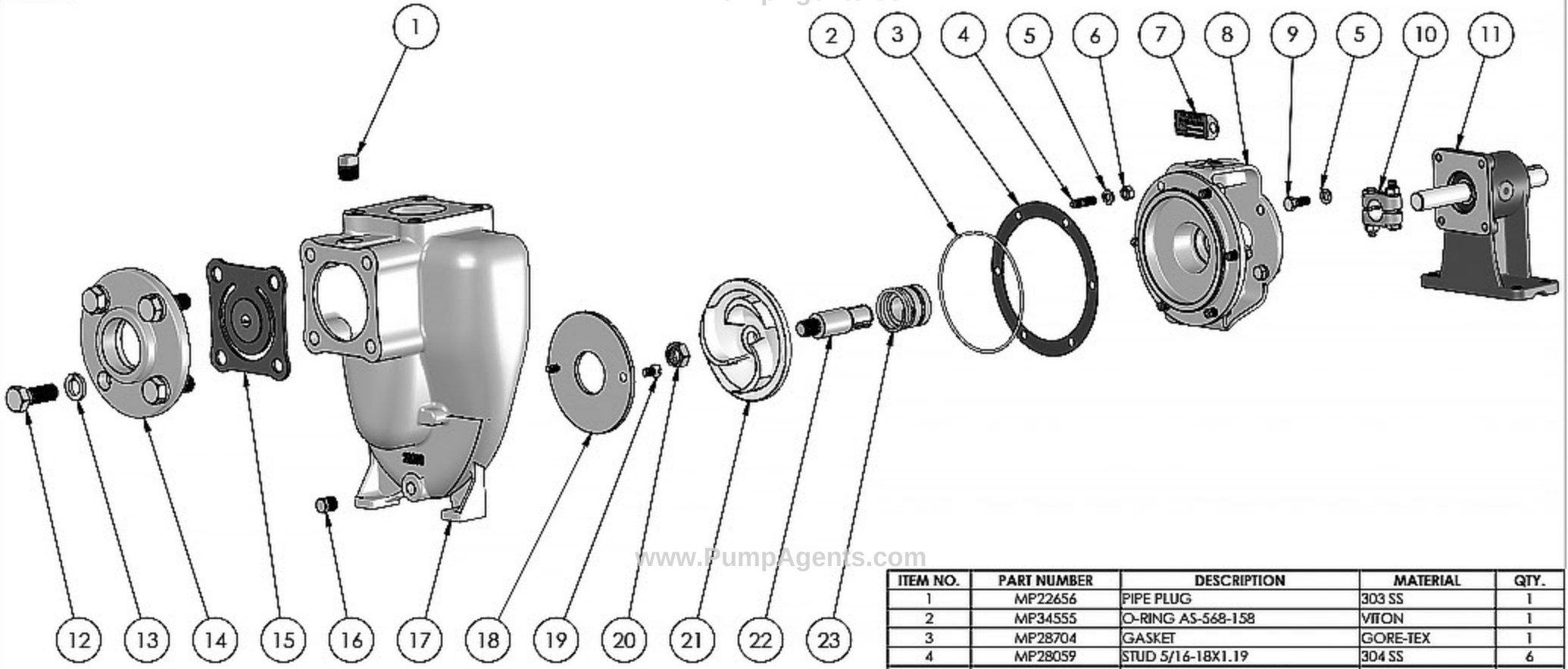

www.PumpAgents.com

ITEM NO.	PART NUMBER	DESCRIPTION	MATERIAL	QTY.
1	MP22656	PIPE PLUG	303 SS	1
2	MP34555	O-RING AS-568-158	VITON	1
3	MP28704	GASKET	GORE-TEX	1
4	MP28059	STUD 5/16-18X1.19	304 SS	6
5	MP21238	LOCKWASHER 5/16 X 18	304 SS	12
6	MP21284	HEXNUT 5/16-18X1/2	304 SS	8
7	MP28630	NAME PLATE	304 SS	1
8	MP28277	ADAPTER	316 SS	1
9	MP21278	CAPSCREW SS: HH 5/16-24X.88	304 SS	4
10	MP23002	CLAMP ASSEMBLY	303 SS	1
11	MP26141	PEDESTAL ASSEMBLY	CAST IRON	1
12	MP36606	CAPSCREW 5/8-11X1.75	304 SS	4
13	MP26853	LOCKWASHER 5/8	304 SS	4
14	MP36960	FLANGE	316 SS	1
15	MP37170	FLAPPER ASSEMBLY	SS/VITON	1
16	MP21267	PIPE PLUG HH 1/4 NPT	316 SS	1
17	MP28276	HOUSING	CF8M SS	1
18	MP27978	WEAR PLATE	316 SS	1
19	MP28742	SCREW FHS - 5/16-18	316 SS	2
20	MP29194	HEX JAM NUT 5/8-18	316 SS	1
21	MP26916	IMPELLER	CF8M SS	1
22	MP28810	DRIVE SLEEVE	316 SS	1
23	MP22560	SEAL ASSEMBLY	SVC SSC	1

REV	DESCRIPTION	DRAWN	DATE	EN
G				
F				
E				
D				
C				
B	.	-	-	-
A	NEW RELEASE ECN 1135601	SF	9/2/20	BB

UNLESS OTHERWISE NOTED
THIRD ANGLE PROJECTION

2 PLACE DIM ± .020
3 PLACE DIM ± .010
ANGULAR DIM ± 1°

DO NOT SCALE

MP PUMPS, INC.
FRASER, MICHIGAN 48026, U.S.A.

MATERIAL: MATERIAL SPECS

DRAWN BY	DATE DRAWN	APPROV.	LEGAL	MADE FOR	MADE FROM
SF	9/2/20	BB			

NAME: FM8PMP SS:PED 4.1 T-21 SSC

DRAWING NO: MP50951

NOTE: THIS DRAWING OR PRINT, PROPERTY OF MP PUMPS INC., CONTAINS PROPRIETARY AND CONFIDENTIAL INFORMATION. IT SHALL BE USED ONLY AS APPROVED BY MP PUMPS AND SHALL NOT BE GIVEN TO OTHERS OR COPIED WITHOUT THE WRITTEN CONSENT OF MP PUMPS. RETURN TO MP PUMPS PROMPTLY WHEN REQUESTED.