DRAWING NO
38413

www.PumpAgents.com

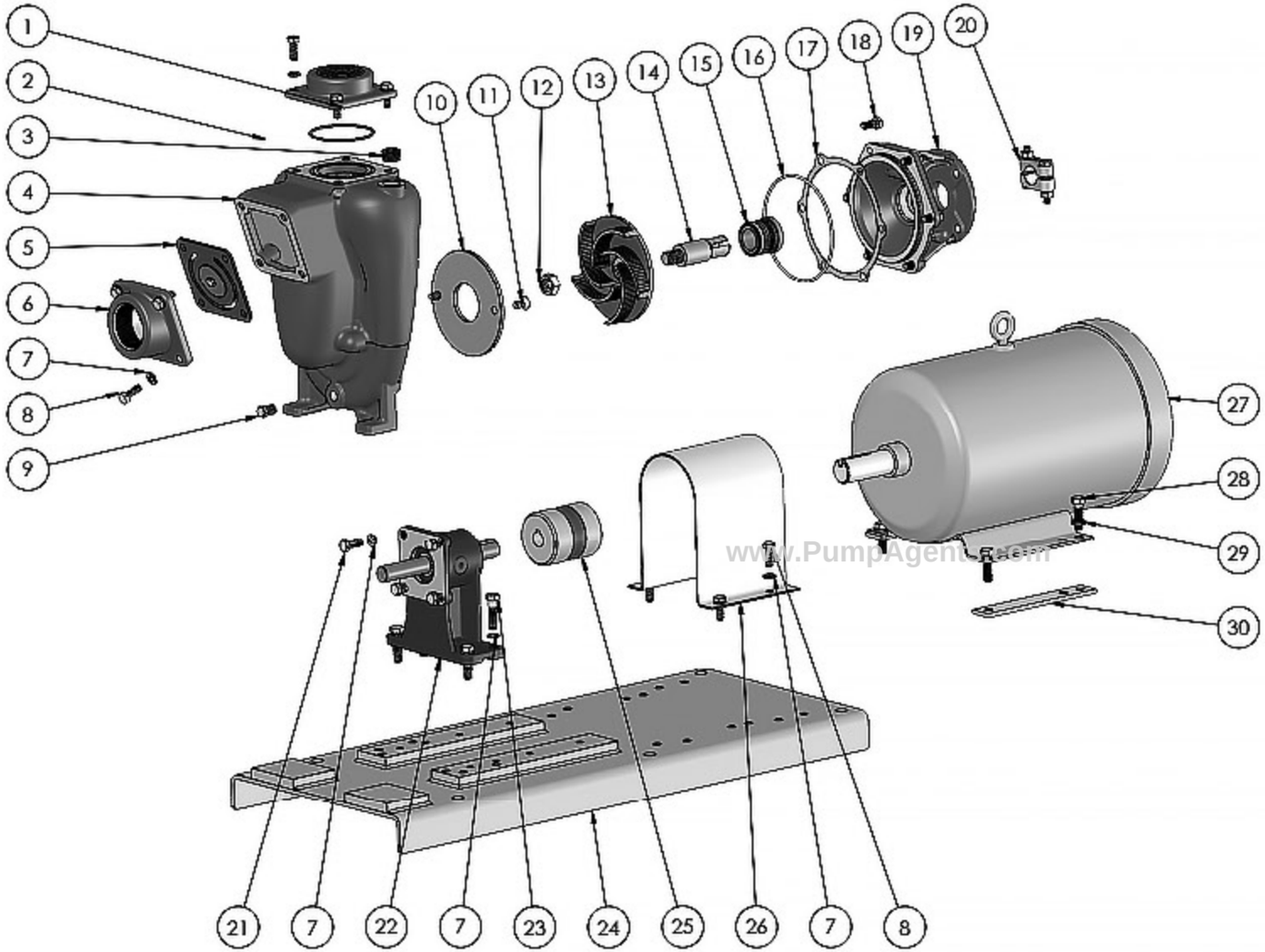

www.PumpAgents.com

ITEM NO.	PART NUMBER	DESCRIPTION	MATERIAL	QTY.
1	22311	FLANGE	CAST IRON	1
2	37141	O-RING AS-149	VITON	1
3	37140	PIPE PLUG 1/2"NPT	ZINC PLATED STEEL	1
4	22251	HOUSING	CAST IRON	1
5	23022	FLAPPER ASSEMBLY	BUNA	1
6	22387	SUCTION FLANGE	CAST IRON	1
7	21238	LOCKWASHER 5/16 X 18	304 SS	20
8	21242	CAP SCREW HH 5/16-18 X 7/8	304 SS	12
9	41475	PIPE PLUG:1/4 NPT	STEEL	1
10	22260	WEAR PLATE	STEEL	1
11	37137	SCREW FHS 5/16-18 X 5/8	304 SS	2
12	22655	HEX JAM NUT 5/8-18	304 SS	1
13	36408	IMPELLER	CAST IRON	1
14	22286	DRIVE SLEEVE	303 SS	1
15	22272	SEAL ASY T-2100	CCS VITON	1
16	34555	O-RING AS-568-158	VITON	1
17	22255	GASKET	LEXIDE NI-2085	1
18	24965	CAPSCREW: 5/16-18X3/4 PATCH	304 SS	6
19	22247	ADAPTER	CAST IRON	1
20	23002	CLAMP ASY	304 SS	1
21	21278	HEX BOLT 5/16-24 X.98	304 SS	4
22	26141	PEDESTAL ASSEMBLY	CAST IRON	1
23	21259	CAPSCREW 3/8-16	304 SS	4
24	26305	BASE	STEEL	1
25	22444	COUPLING	FLEXIBLE	1
26	26304	COUPLING GUARD	STEEL	1
27	22555	ELECTRIC MOTOR	N/A	1
28	21274	CAPSCREW 3/8-16X1.25	304 SS	4
29	21266	LOCKWASHER 3/8 X 1/8	304 SS	4
30	26306	BLOCK SPACER	LOW CARBON STEEL	2

UNLESS OTHERWISE NOTED
THIRD ANGLE PROJECTION

3 PLACE DIM. ± .030
2 PLACE DIM. ± .010
ANGULAR DIM. ± 1°

DO NOT SCALE

MP PUMPS, INC.
FRASER, MICHIGAN 48026, U.S.A.

MATERIAL | MATERIAL SPECS.

DRAWN BY	DATE COMP.	APPROV.	SCALE	MADE FOR	MADE FROM
SF	9/17/19	SF			

NAME
FMBPMP C:5-3 184T 5.0HF WBA

38413

NOTE: THIS DRAWING OR PRINT, PROPERTY OF MP PUMPS, INC., CONTAINS PROPRIETARY AND CONFIDENTIAL INFORMATION. IT SHALL BE USED ONLY AS APPROVED BY MP PUMPS AND SHALL NOT BE GIVEN OR OTHERWISE COPIED WITHOUT THE WRITTEN CONSENT OF MP PUMPS. RETURN TO MP PUMPS PROMPTLY WHEN REQUESTED.