DRAWING NO
38122

www.PumpAgents.com

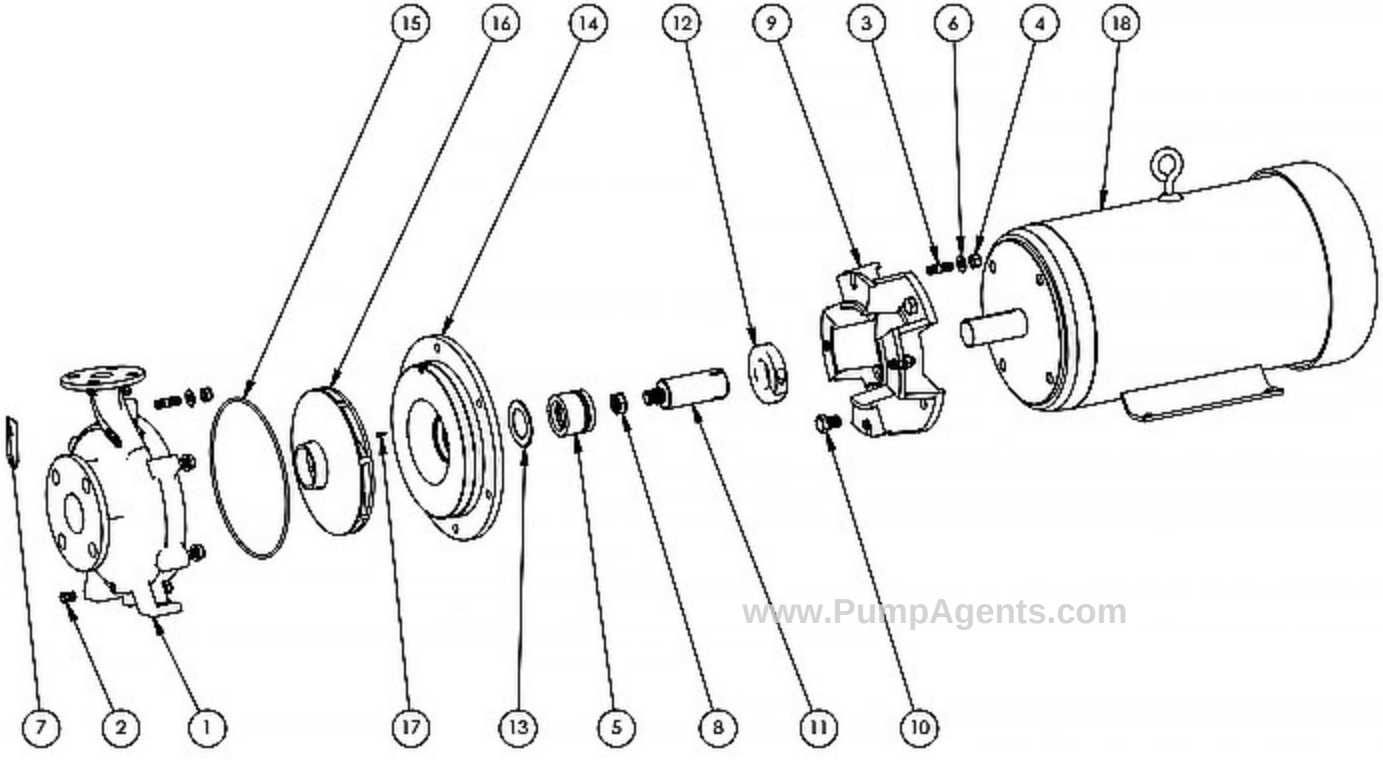

www.PumpAgents.com

ITEM NO.	PART NUMBER	DESCRIPTION	MATERIAL	QTY.
1	31424	VOLUTE	STAINLESS STEEL	1
2	21255	PIPE PLUG 1/8" NPT	316 STAINLESS STEEL	2
3	21260	STUD 3/8-16X1.32	STAINLESS STEEL	10
4	21268	HEXNUT 3/8-16	304 STAINLESS STEEL	10
5	26565	SEAL ASSEMBLY	CHEMLON	1
6	28053	FLAT WASHER	STAINLESS STEEL	10
7	28630	NAME PLATE	STAINLESS STEEL	1
8	29194	HEX JAM NUT	STAINLESS STEEL	1
9	31091	MOTOR ADAPTOR	CAST IRON	1
10	31235	CAPSCREW 1/2-13X3/4	STAINLESS STEEL	4
11	31311	DRIVE SLEEVE	STAINLESS STEEL	1
12	31312	CLAMP	STEEL	1
13	31372	SHIM	STAINLESS STEEL	1
14	31426	SEAL HOUSING	STAINLESS STEEL	1
15	31431	O-RING	TEFLON	1
16	31953	IMPELLER	STAINLESS STEEL	1
17	32013	EXPANSION PIN	STAINLESS STEEL	1
18	33292	ELECTRIC MOTOR		1

REV	DESCRIPTION	DRAWN	DATE	EN
G				
F				
E				
D				
C				
B				
A				

UNLESS OTHERWISE NOTED
THIRD ANGLE PROJECTION

2 PLACE DIM ± .020
3 PLACE DIM ± .010
ANGULAR DIM ± 1°

DO NOT SCALE

MP PUMPS, INC.
FRASER, MICHIGAN 48026, U.S.A.

MATERIAL: MATERIAL SPECS

DRAWN BY	DATE DRAWN	APPROV.	SCALE	MADE FOR	MADE FROM
S.F.	3/19/14	D.D.			

NAME: CF7PMP SS:15-3 215TC

DRAWING NO: 38122

NOTE: THIS DRAWING OR PRINT, PROPERTY OF MPPUMPS INC., CONTAINS PROPRIETARY AND CONFIDENTIAL INFORMATION. IT SHALL BE USED ONLY AS APPROVED BY MPPUMPS AND SHALL NOT BE GIVEN TO OTHERS OR COPIED WITHOUT THE WRITTEN CONSENT OF MPPUMPS. RETURN TO MPPUMPS PROMPTLY WHEN REQUESTED.