DRAWING NO
37259

www.PumpAgents.com

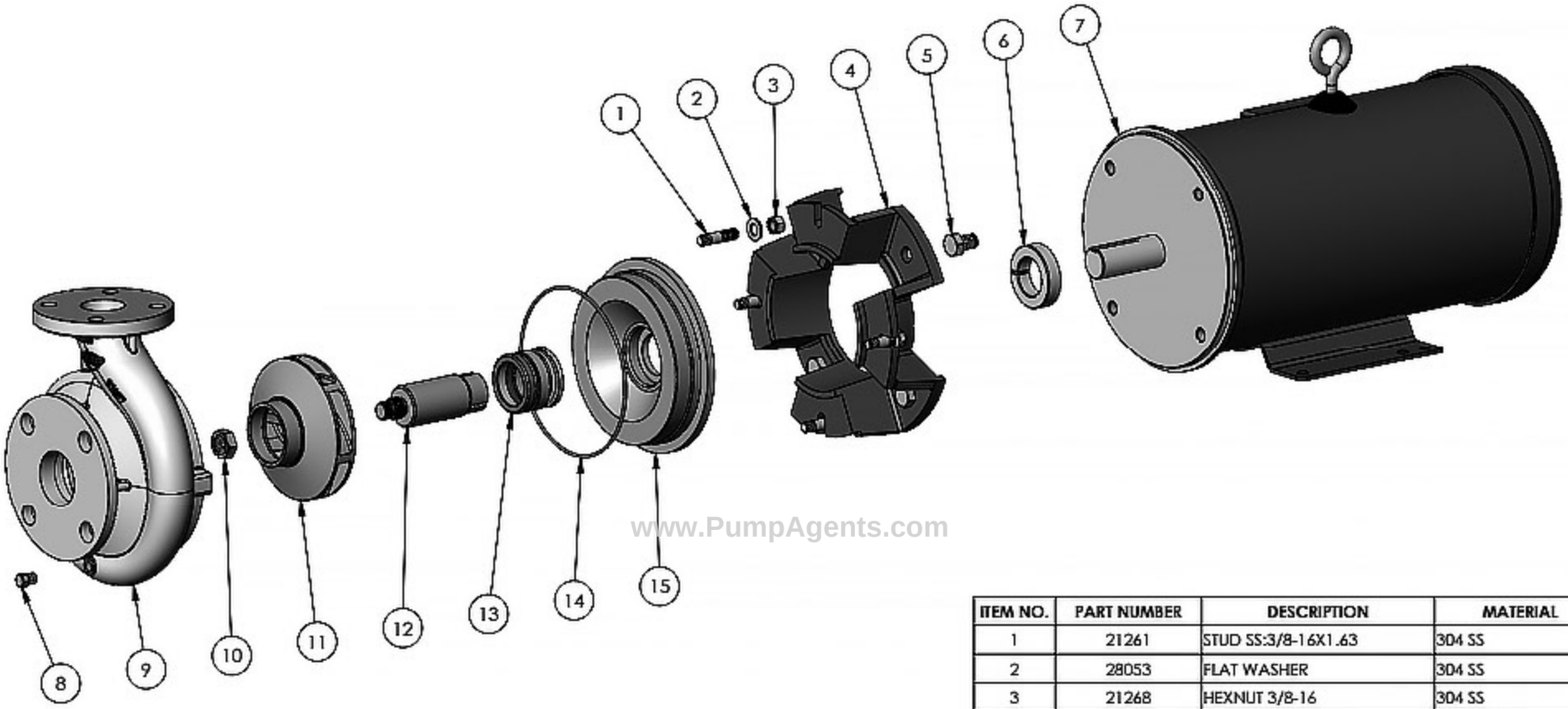

www.PumpAgents.com

ITEM NO.	PART NUMBER	DESCRIPTION	MATERIAL	QTY.
1	21261	STUD SS:3/8-16X1.63	304 SS	4
2	28053	FLAT WASHER	304 SS	4
3	21268	HEXNUT 3/8-16	304 SS	4
4	31091	MOTOR ADAPTOR	CAST IRON	1
5	31235	CAPSCREW 1/2-13X3/4	304 SS	4
6	31099	CLAMP	STEEL	1
7	22413	ELECTRIC MOTOR - 184TC	TEFC	1
8	21255	PIPE PLUG 1/8" NPT	316 SS	2
9	31098	VOLUTE	CF8M SS	1
10	29194	HEX JAM NUT 5/8-18	316 SS	1
11	31668	IMPELLER	CF8M SS	1
12	31094	DRIVE SLEEVE	316 SS	1
13	31374	SEAL ASSEMBLY	CCS VITON	1
14	31233	O-RING	VITON	1
15	31093	HOUSING SEAL	CF8M SS	1

REV	DESCRIPTION	DRAWN	DATE	EN
G				
F				
E				
D				
C				
B				
A				

UNLESS OTHERWISE NOTED
THIRD ANGLE PROJECTION

2 PLACE DIM ± .020
3 PLACE DIM ± .010
ANGULAR DIM ± 1°

DO NOT SCALE

MP PUMPS, INC.
FRASER, MICHIGAN 48026, U.S.A.

MATERIAL SPECS

DRAWN BY	DATE COMP.	APPROV.	SCALE	MADE FOR	MADE FROM
S.F.	5/28/19	D.D.			

NAME: CF5PMP SS:7.5-3 184TC 5.1 T-2100

DRAWING NO: 37259

NOTE: THIS DRAWING OR PRINT, PROPERTY OF MP PUMPS INC., CONTAINS PROPRIETARY AND CONFIDENTIAL INFORMATION. IT SHALL BE USED ONLY AS APPROVED BY MP PUMPS AND SHALL NOT BE GIVEN TO OTHERS OR COPIED WITHOUT THE WRITTEN CONSENT OF MP PUMPS. RETURN TO MP PUMPS PROMPTLY WHEN REQUESTED.