DRAWING NO
36609

www.PumpAgents.com

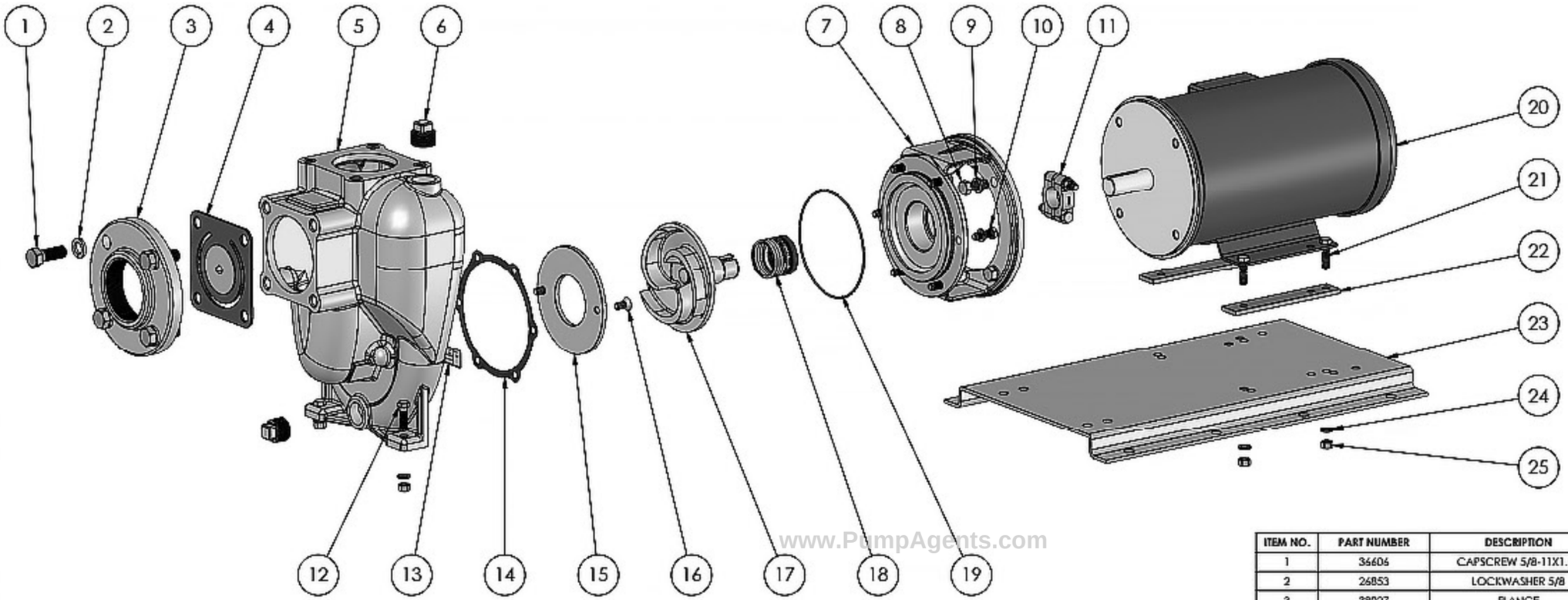

www.PumpAgents.com

ITEM NO.	PART NUMBER	DESCRIPTION	MATERIAL	QTY.
1	36606	CAPSCREW 5/8-11X1.75	304 STAINLESS STEEL	4
2	26853	LOCKWASHER 5/8	304 STAINLESS STEEL	4
3	38027	FLANGE	316 STAINLESS STEEL	1
4	38077	FLAPPER ASSEMBLY	SS/VITON	1
5	38011	HOUSING	316 STAINLESS STEEL	1
6	34780	PIPE PLUG	316 STAINLESS STEEL	2
7	38061	ADAPTER	316 STAINLESS STEEL	1
8	21246	CAPSCREW 1/2-13X1.25	304 STAINLESS STEEL	4
9	21254	LOCKWASHER 1/2"	304 STAINLESS STEEL	4
10	21291	CAPSCREW 3/8-16X1.13	304 STAINLESS STEEL	6
11	23039	CLAMP ASSEMBLY	303 STAINLESS STEEL	1
12	21274	CAPSCREW 3/8-16X1.25	304 STAINLESS STEEL	2
13	28630	NAME PLATE	STAINLESS STEEL	1
14	22240	GASKET	LEXIDE NI-2085	1
15	27979	WEAR PLATE	316 STAINLESS STEEL	1
16	37115	SCREW FHS 3/8-16X3/4	304 STAINLESS STEEL	2
17	35207	IMPELLER	316 STAINLESS STEEL	1
18	22362	SEAL ASSEMBLY	CCS/VITON	1
19	29715	O RING AS 568-162	VITON	1
20	22414	ELECTRIC MOTOR	TEFC	1
21	21259	CAPSCREW 3/8-16	304 STAINLESS STEEL	4
22	24710	BLOCK SPACER	STEEL	2
23	22423	BASE	ZPS	1
24	21266	LOCKWASHER 3/8 X 1/8	304 STAINLESS STEEL	14
25	21268	HEXNUT 3/8-16	304 STAINLESS STEEL	8

REV	DESCRIPTION	DRAWN	DATE	CHK
G				
F				
E				
D				
C				
B				
A				

UNLESS OTHERWISE NOTED
THIRD ANGLE PROJECTION
2 PLACE DIM ± .020
3 PLACE DIM ± .010
ANGULAR DIM ± 1°
DO NOT SCALE

MP PUMPS, INC.
FRASER, MICHIGAN 48026, U.S.A.

MATERIAL | MATERIAL SPECS
DRAWN BY: SF | DATE COMP: 3/16/16 | APPROV: DD | SCALE | IMAGE FILE | IMAGE FROM

NAME: FM15PMP SS:5-3 184TC 5.5 WBA

36609

NOTE: THIS DRAWING OR PARTS PROPERTY OF MP PUMPS, INC., CONTAINS PROPRIETARY AND CONFIDENTIAL INFORMATION. IT SHALL BE USED ONLY AS APPROVED BY MP PUMPS AND SHALL NOT BE LOANED TO OTHERS OR COPIED IN WHOLE OR IN PART WITHOUT WRITTEN CONSENT OF MP PUMPS. RETURN TO MP PUMPS PROMPTLY WHEN REQUESTED.