DRAWING NO
36310

www.PumpAgents.com

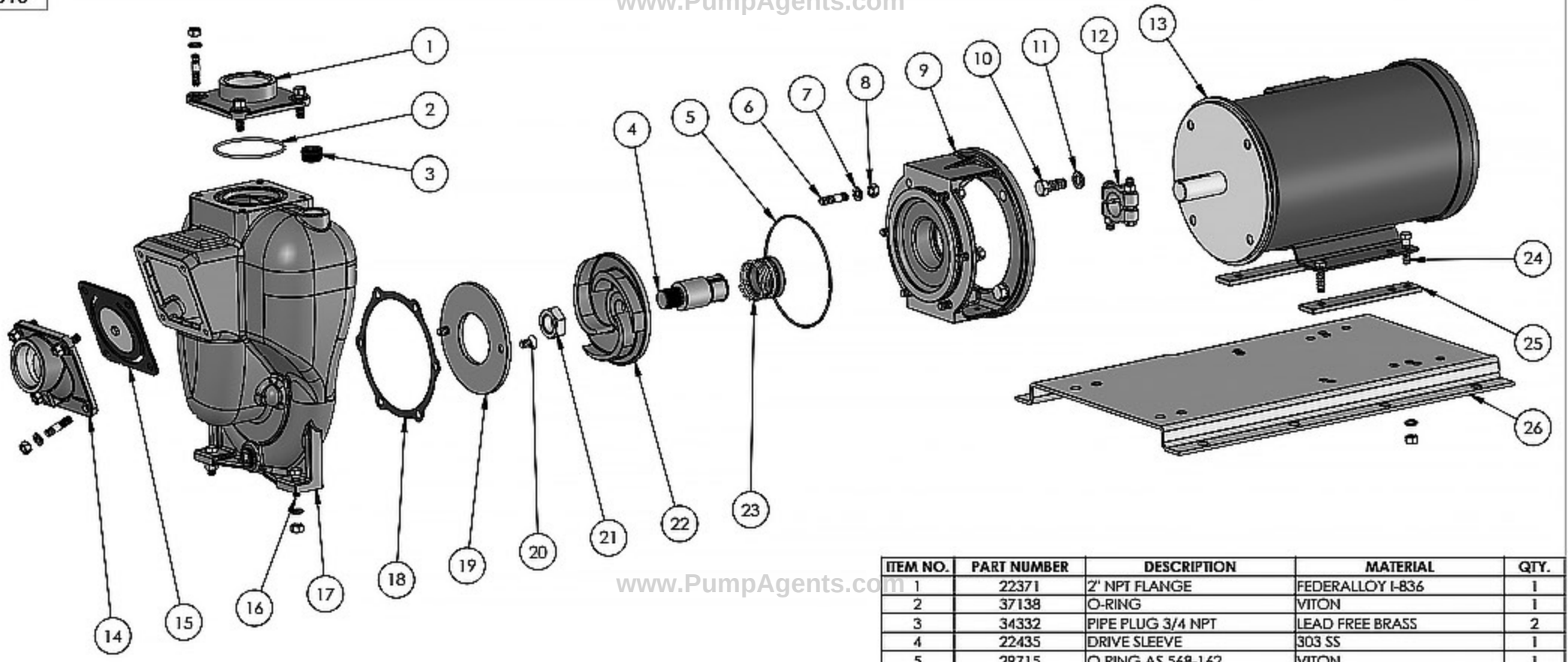

www.PumpAgents.com

ITEM NO.	PART NUMBER	DESCRIPTION	MATERIAL	QTY.
1	22371	2" NPT FLANGE	FEDERALLOY I-836	1
2	37138	O-RING	VITON	1
3	34332	PIPE PLUG 3/4 NPT	LEAD FREE BRASS	2
4	22435	DRIVE SLEEVE	303 SS	1
5	29715	O RING AS 568-162	VITON	1
6	21261	STUD SS:3/8-16X1.63	304 SS	14
7	21266	LOCKWASHER 3/8 X 1/8	304 SS	20
8	21268	HEXNUT 3/8-16	304 SS	20
9	22432	ADAPTER	FEDERALLOY I-836	1
10	21246	CAPSCREW 1/2-13X1.25	304 SS	4
11	21254	LOCKWASHER 1/2"	304 SS	4
12	23039	CLAMP ASSEMBLY	303 SS	1
13	22414	ELECTRIC MOTOR	TEFC	1
14	22368	FLANGE	FEDERALLOY I-836	1
15	23040	FLAPPER ASSEMBLY	BUNA/STEEL	1
16	21274	CAPSCREW 3/8-16X1.25	304 SS	2
17	22350	HOUSING	FEDERALLOY I-836	1
18	22240	GASKET	LEXIDE NI-2085	1
19	22243	WEAR PLATE	BRASS	1
20	37115	SCREW FHS 3/8-16X3/4	304 SS	2
21	22417	HEX JAM NUT	304 SS	1
22	22498	IMPELLER	FEDERALLOY I-836	1
23	22361	SEAL ASSEMBLY	CCS/VITON	1
24	21259	CAPSCREW 3/8-16	304 SS	4
25	24710	BLOCK SPACER	STEEL	2
26	22423	BASE	ZPS	1

REV	DESCRIPTION	DRAWN	DATE	EN
G				
F				
E				
D				
C				
B				
A				

UNLESS OTHERWISE NOTED
THIRD ANGLE PROJECTION

2 PLACE DIM ± .020
3 PLACE DIM ± .010
ANGULAR DIM ± 1°

DO NOT SCALE

MP PUMPS, INC.
FRASER, MICHIGAN 48026, U.S.A.

MATERIAL SPECS

DRAWN BY	DATE COMP.	APPROV.	SCALE	MADE FOR	MADE FROM
SF	8/30/19	SF			

NAME: FM10PMP B:5-3 184TC 5.75 WBA

DRAWING NO: 36310

NOTE: THIS DRAWING OR PRINT, PROPERTY OF MP PUMPS INC., CONTAINS PROPRIETARY AND CONFIDENTIAL INFORMATION. IT SHALL BE USED ONLY AS APPROVED BY MP PUMPS AND SHALL NOT BE GIVEN TO OTHERS OR COPIED WITHOUT THE WRITTEN CONSENT OF MP PUMPS. RETURN TO MP PUMPS PROMPTLY WHEN REQUESTED.