DRAWING NO
35861

www.PumpAgents.com

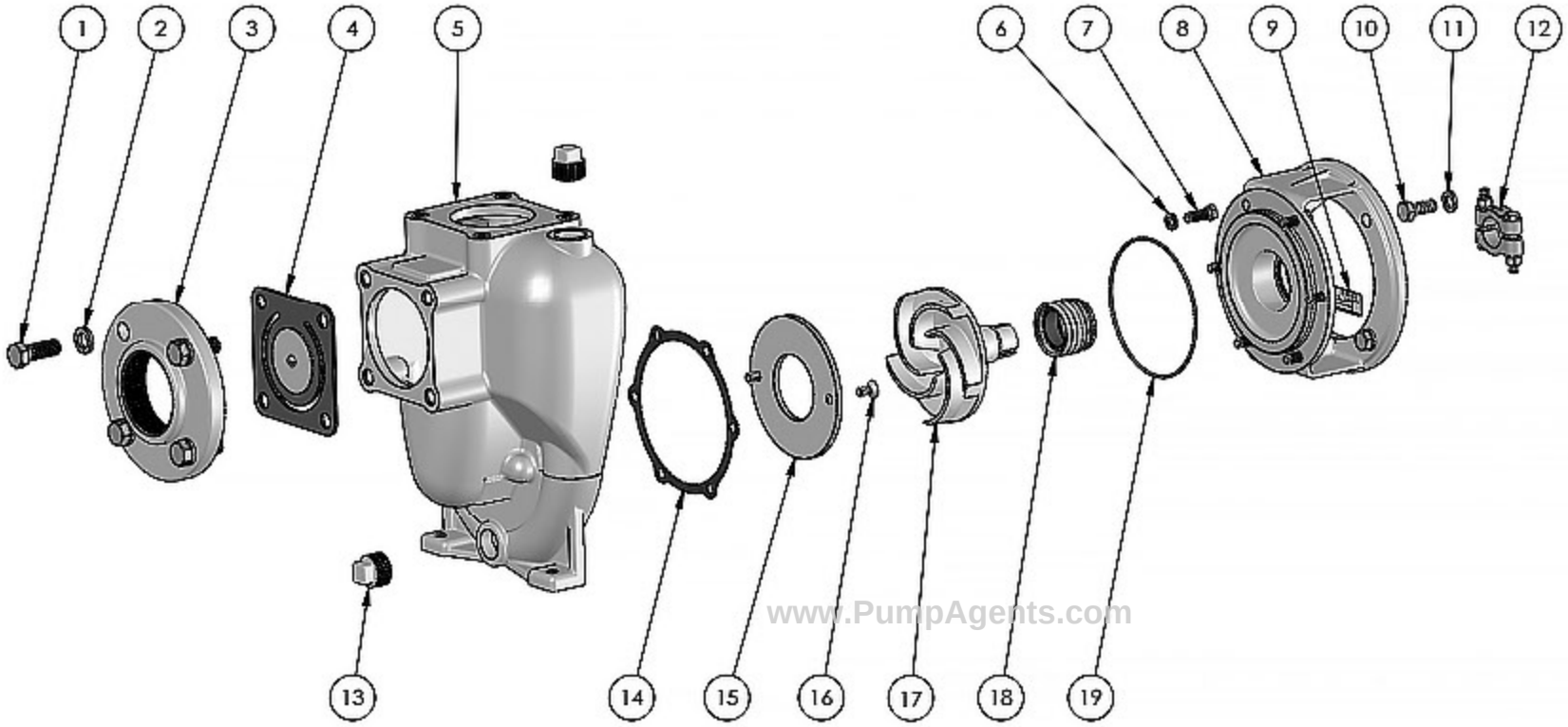

www.PumpAgents.com

ITEM NO.	PART NUMBER	DESCRIPTION	MATERIAL	QTY.
1	36606	CAPSCREW 5/8-11X1.75	304 STAINLESS STEEL	4
2	26853	LOCKWASHER 5/8	304 STAINLESS STEEL	4
3	38027	FLANGE	316 STAINLESS STEEL	1
4	38077	FLAPPER ASSEMBLY	SS/VITON	1
5	38011	HOUSING	316 STAINLESS STEEL	1
6	21266	LOCKWASHER 3/8 X 1/8	304 STAINLESS STEEL	6
7	21291	CAPSCREW 3/8-16X1.13	304 STAINLESS STEEL	6
8	38061	ADAPTER	316 STAINLESS STEEL	1
9	28630	NAME PLATE	STAINLESS STEEL	1
10	21246	CAPSCREW 1/2-13X1.25	304 STAINLESS STEEL	4
11	21254	LOCKWASHER	304 STAINLESS STEEL	4
12	23039	CLAMP ASSEMBLY	303 STAINLESS STEEL	1
13	34780	PIPE PLUG	316 STAINLESS STEEL	2
14	22240	GASKET	LEXIDE NI-2085	1
15	27979	WEAR PLATE	316 STAINLESS STEEL	1
16	37115	SCREW 3/8-16X3/4	304 STAINLESS STEEL	2
17	33406	IMPELLER	304 STAINLESS STEEL	1
18	26461	SEAL ASY:1.5	SSC	1
19	29715	O RING AS 568-162	VITON	1

REV	DESCRIPTION	DRAWN	DATE	EN
G				
F				
E				
D				
C				
B				
A				

UNLESS OTHERWISE NOTED
THIRD ANGLE PROJECTION

2 PLACE DIM ± .020
3 PLACE DIM ± .010
ANGULAR DIM ± 1°

DO NOT SCALE

MP PUMPS, INC.
FRASER, MICHIGAN 48026, U.S.A.

MATERIAL: MATERIAL SPECS

DRAWN BY	DATE COMP.	APPROV.	SCALE	MADE FOR	MADE FROM
S.F.	1/28/15	D.D.			

NAME: FM15PPK SS:CCMTR 1.13 5.62 SSC 58L

DRAWING NO: 35861

NOTE: THIS DRAWING OR PRINT, PROPERTY OF MP PUMPS INC., CONTAINS PROPRIETARY AND CONFIDENTIAL INFORMATION. IT SHALL BE USED ONLY AS APPROVED BY MP PUMPS AND SHALL NOT BE GIVEN TO OTHERS OR COPIED WITHOUT THE WRITTEN CONSENT OF MP PUMPS. RETURN TO MP PUMPS PROMPTLY WHEN REQUESTED.