DRAWING NO
35320

www.PumpAgents.com

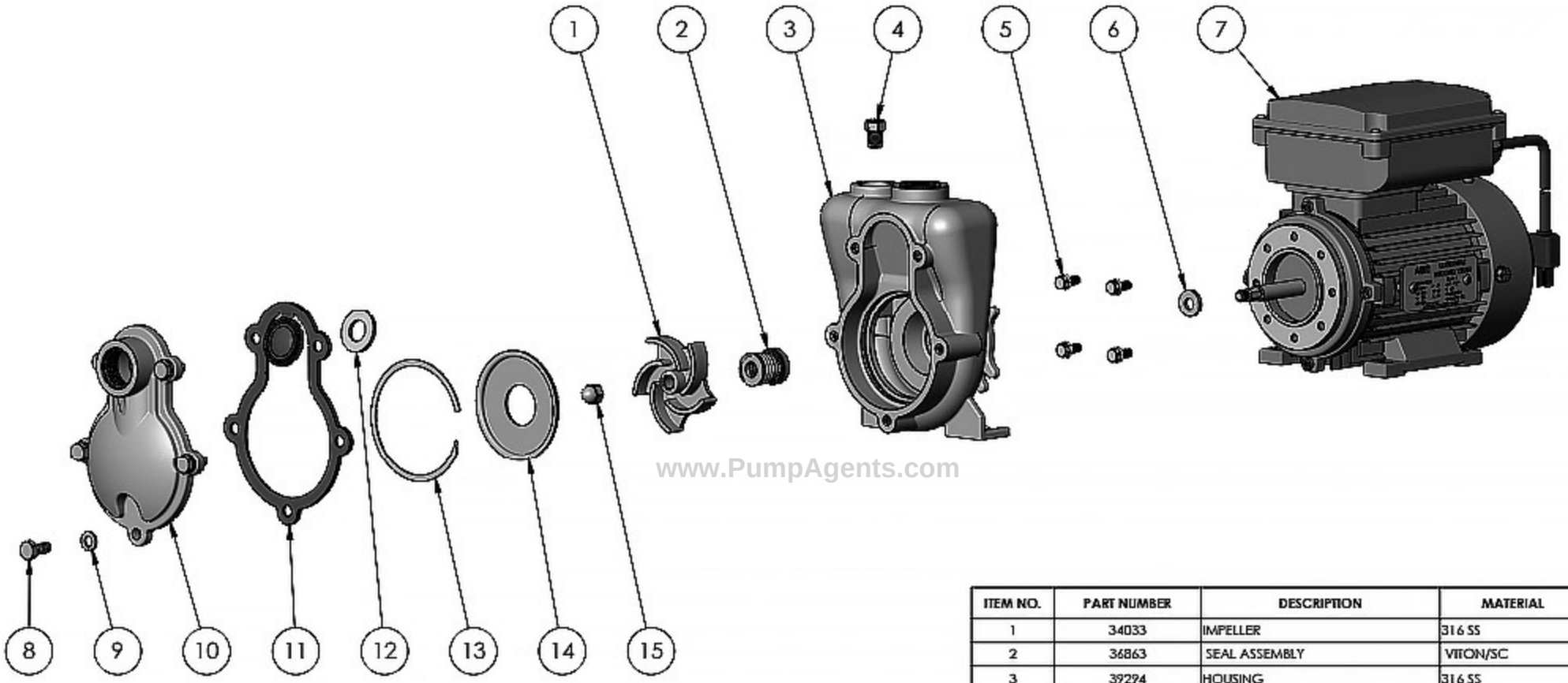

www.PumpAgents.com

ITEM NO.	PART NUMBER	DESCRIPTION	MATERIAL	QTY.
1	34033	IMPELLER	316 SS	1
2	36863	SEAL ASSEMBLY	VITON/SC	1
3	39294	HOUSING	316 SS	1
4	21255	PIPE PLUG 1/8" NPT	316 SS	1
5	39827	HEX HEAD CAP SCREW M5 X 0.8	304 SS	4
6	21627	SLINGER	NEOPRENE	1
7	39280	ELECTRIC MOTOR	TEFC	1
8	35039	CAPSCREW 1/4-20X5/8	316 SS	5
9	33564	LOCKWASHER 1/4"	304 SS	5
10	35024	COVER	316 SS	1
11	35025	GASKET	VITON	1
12	34350	FLAT WASHER 1.06X.50X.09	304 SS	1
13	35027	SNAP RING	316 SS	1
14	35026	WEAR PLATE	316 SS	1
15	28766	ACORN NUT	316 SS	1

REV	DESCRIPTION	DRAWN	DATE	ECN
G				
F				
E				
D				
C				
B	ADDED WASHER 34350 ECN #1933	SF	9/21/17	DD
A	REMOVE SEAL 3-16, ADD SEAL 3-21 ECN# 1450	SF	7/15/14	DD

UNLESS OTHERWISE NOTED
THIRD ANGLE PROJECTION

2 PLACE DIM ± .020
3 PLACE DIM ± .010
ANGULAR DIM ± 1°

DO NOT SCALE

MP PUMPS, INC.
FRASER, MICHIGAN 48026, U.S.A.

MATERIAL: MATERIAL SPECS

DRAWN BY	DATE COMP.	APPROV.	SCALE	MADE FOR	MADE FROM
S.F.	7/15/14	D.D.			

NAME: FRX75-SP SS:1/6-1 115V 60HZ ODP T-21

DRAWING NO: 35320

NOTE: THIS DRAWING OR PRINT, PROPERTY OF MP PUMPS INC. CONTAINS PROPRIETARY AND CONFIDENTIAL INFORMATION. IT SHALL BE USED ONLY AS APPROVED BY MP PUMPS AND SHALL NOT BE GIVEN TO OTHERS OR COPIED WITHOUT THE WRITTEN CONSENT OF MP PUMPS. RETURN TO MP PUMPS PROMPTLY WHEN REQUESTED.