DRAWING NO
35148

www.PumpAgents.com

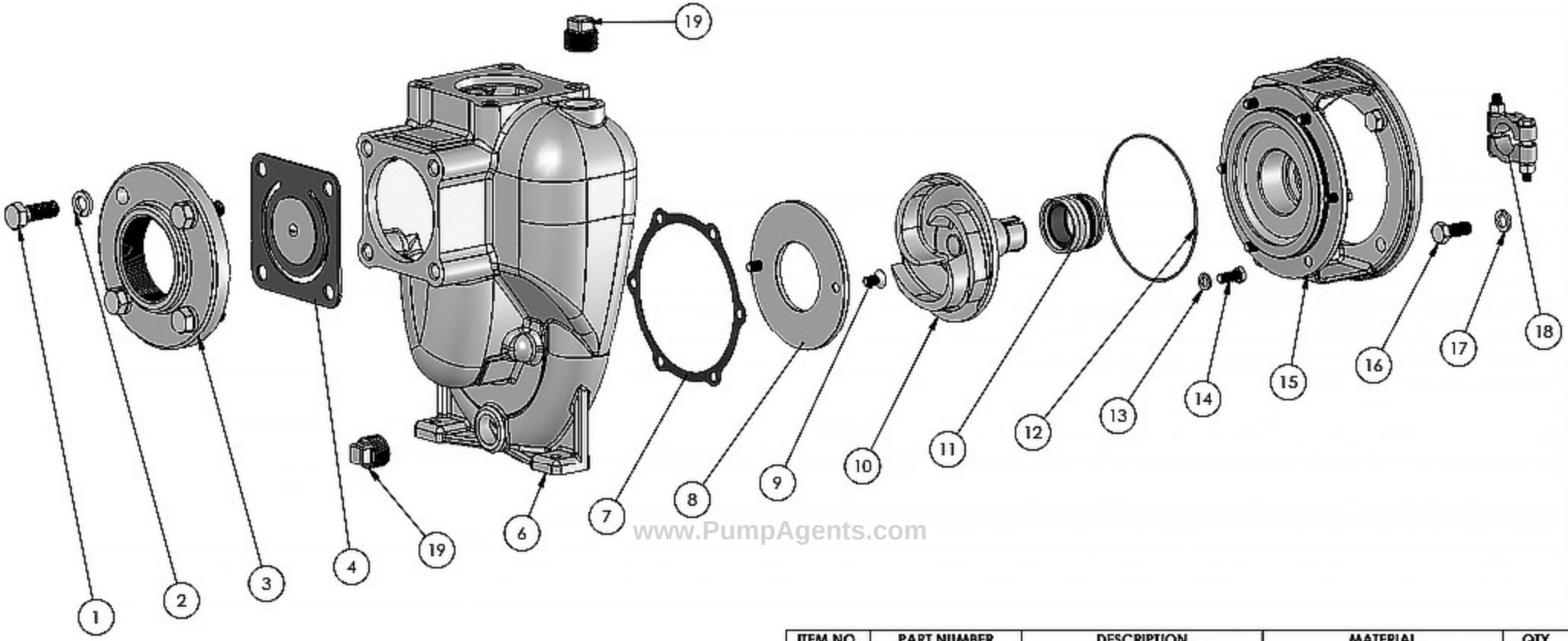

www.PumpAgents.com

ITEM NO.	PART NUMBER	DESCRIPTION	MATERIAL	QTY.
1	36606	CAPSCREW 5/8-11X1.75	304 SS	4
2	26853	LOCKWASHER 5/8	304 SS	4
3	38027	FLANGE	316 SS	1
4	38077	FLAPPER ASSEMBLY	SS/VITON	1
6	38011	HOUSING	316 SS	1
7	22240	GASKET	LEXIDE NI-2085	1
8	27979	WEAR PLATE	316 SS	1
9	37115	SCREW FHS 3/8-16X3/4	304 SS	2
10	35146	IMPELLER	316 SS	1
11	26461	SEAL ASY:1.5	SSC	1
12	29715	O RING AS 568-162	VITON	1
13	21266	LOCKWASHER 3/8 X 1/8	304 SS	6
14	21251	CAPSCREW: 3/8-16X7/8	304 SS	6
15	38061	ADAPTER	316 SS	1
16	21246	CAPSCREW 1/2-13X1.25	304 SS	4
17	21254	LOCKWASHER 1/2"	304 SS	4
18	23039	CLAMP ASSEMBLY	303 SS	1
19	34780	PIPE PLUG	316 SS	2

REV	DESCRIPTION	DRAWN	DATE	EN
G				
F				
E				
D				
C				
B				
A				

UNLESS OTHERWISE NOTED
THIRD ANGLE PROJECTION

2 PLACE DIM ± .020
3 PLACE DIM ± .010
ANGULAR DIM ± 1°

DO NOT SCALE

MP PUMPS, INC.
FRASER, MICHIGAN 48026, U.S.A.

MATERIAL: 316 STAINLESS STEEL

DRAWN BY	DATE COMP.	APPROV.	SCALE	MADE FOR	MADE FROM
C.C.	4/2/18	D.D.			

NAME: FM15PPK SS:CCMTR 1.13 5.62 SSC

DRAWING NO: 35148

NOTE: THIS DRAWING OR PRINT, PROPERTY OF MP PUMPS INC., CONTAINS PROPRIETARY AND CONFIDENTIAL INFORMATION. IT SHALL BE USED ONLY AS APPROVED BY MP PUMPS AND SHALL NOT BE GIVEN TO OTHERS OR COPIED WITHOUT THE WRITTEN CONSENT OF MP PUMPS. RETURN TO MP PUMPS PROMPTLY WHEN REQUESTED.