DRAWING NO
MP34228

www.PumpAgents.com

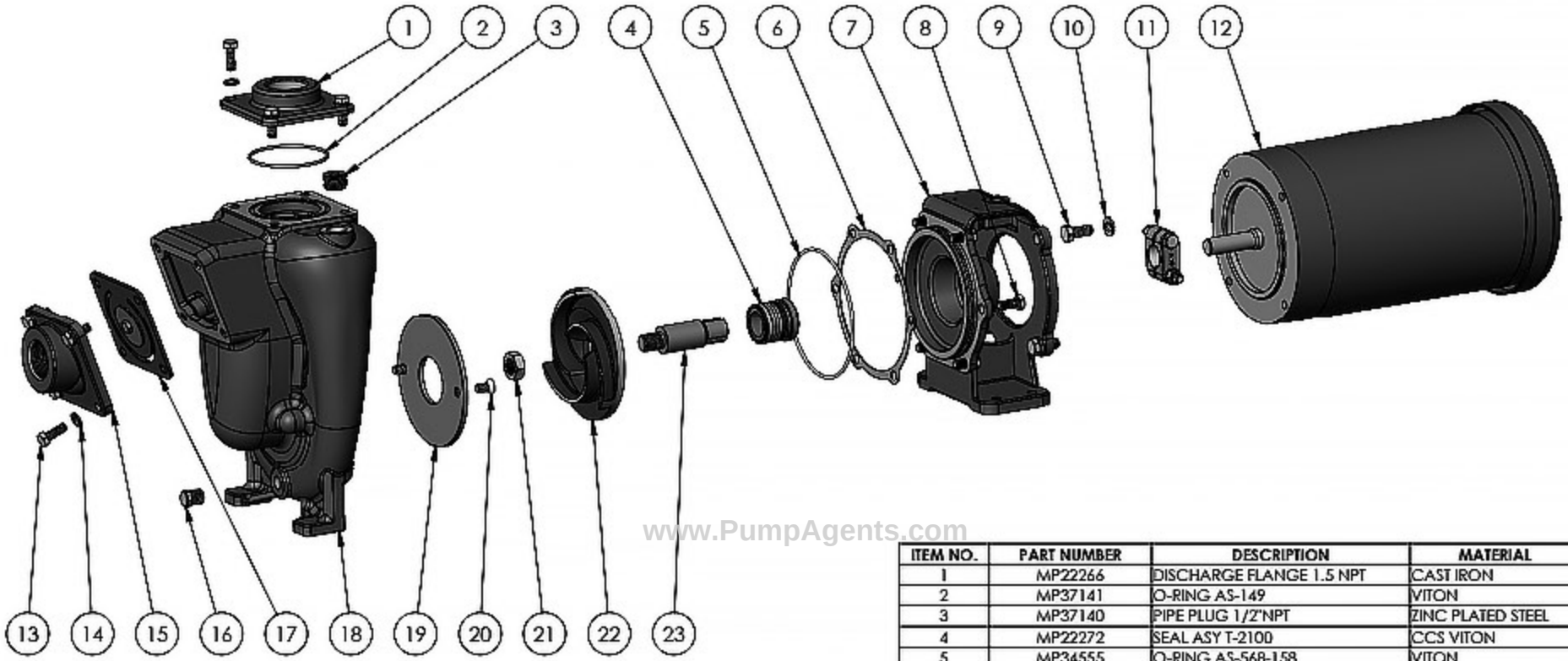

www.PumpAgents.com

ITEM NO.	PART NUMBER	DESCRIPTION	MATERIAL	QTY.
1	MP22266	DISCHARGE FLANGE 1.5 NPT	CAST IRON	1
2	MP37141	O-RING AS-149	VITON	1
3	MP37140	PIPE PLUG 1/2"NPT	ZINC PLATED STEEL	1
4	MP22272	SEAL ASY T-2100	CCS VITON	1
5	MP34555	O-RING AS-568-158	VITON	1
6	MP22255	GASKET	LEXIDE NI-2085	1
7	MP25904	ADAPTOR	CAST IRON	1
8	MP24965	CAPSCREW: 5/16-18X3/4 PATCH	304 SS	6
9	MP21251	CAPSCREW: 3/8-16X7/8	304 SS	4
10	MP21266	LOCKWASHER 3/8 X 1/8	304 SS	4
11	MP23002	CLAMP ASSEMBLY	303 SS	1
12	MP29432	ELECTRIC MOTOR	TEFC	1
13	MP21242	CAP SCREW HH 5/16-18 X 7/8	304 SS	8
14	MP21238	LOCKWASHER 5/16 X 18	304 SS	10
15	MP22263	SUCTION FLANGE 1.5 NPT	CAST IRON	1
16	MP41475	PIPE PLUG:1/4 NPT	STEEL	1
17	MP23022	FLAPPER ASSEMBLY	BUNA	1
18	MP22251	HOUSING	CAST IRON	1
19	MP22260	WEAR PLATE	STEEL	1
20	MP37137	SCREW FHS 5/16-18 X 5/8	304 SS	2
21	MP22655	HEX JAM NUT	304 SS	1
22	MP22293	IMPELLER	CAST IRON	1
23	MP22253	DRIVE SLEEVE	303 SS	1

REV	DESCRIPTION	DRAWN	DATE	DR
G				
F				
E				
D				
C				
B				
A	NEW RELEASE ECN 1134121	SF	6/4/20	BB

UNLESS OTHERWISE NOTED
THIRD ANGLE PROJECTION
2 PLACE DIM ± .020
3 PLACE DIM ± .010
ANGULAR DIM ± 1°

DO NOT SCALE

MP PUMPS, INC.
FRASER, MICHIGAN 48026, U.S.A.

MATERIAL: MATERIAL SPECS

DRAWN BY	DATE COMP.	APPROV.	SCALE	MADE FOR	MADE FROM
SF	6/4/20	BB			

NAME: FM5PMP C:2-3 56C 5.0

DRAWING NO: MP34228

NOTE: THIS DRAWING OR PRINT, PROPERTY OF MP PUMPS INC., CONTAINS PROPRIETARY AND CONFIDENTIAL INFORMATION. IT SHALL BE USED ONLY AS APPROVED BY MP PUMPS AND SHALL NOT BE GIVEN TO OTHERS OR COPIED WITHOUT THE WRITTEN CONSENT OF MP PUMPS. RETURN TO MP PUMPS PROMPTLY WHEN REQUESTED.