Drawing no
33187

www.PumpAgents.com

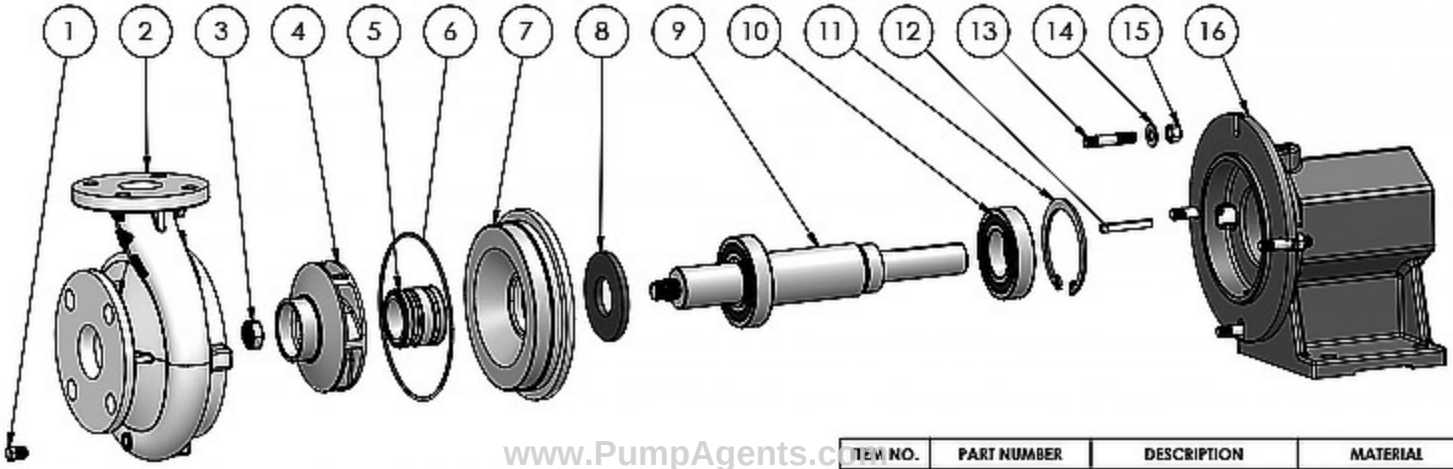

www.PumpAgents.com

ITEM NO.	PART NUMBER	DESCRIPTION	MATERIAL	QTY.
1	21255	PIPE PLUG 1/8" NPT	316 SS	2
2	31098	VOLUTE	CF8M SS	1
3	29194	HEX JAM NUT 5/8-18	316 SS	1
4	31461	IMPELLER	CF8M SS	1
5	31374	SEAL ASSEMBLY	CCS VITON	1
6	31233	O-RING	VITON	1
7	31093	HOUSING SEAL	CF8M SS	1
8	37881	SLINGER	NEO RUBBER	1
9	31802	DRIVE SHAFT	316 SS	1
10	31804	BALL BEARING	STEEL	2
11	31803	SNAP RING	CARBON SPRING STEEL	1
12	33232	SQUARE KEY	STEEL	1
13	33161	STUD 3/8-16X2.00	304 SS	4
14	28053	FLAT WASHER	304 SS	4
15	21268	HEXNUT 3/8-16	304 SS	4
16	31656	BEARING HOUSING	CAST IRON	1

NOTE: THIS DRAWING OR PRINT, PROPERTY OF MP PUMPS INC., CONTAINS PROPRIETARY AND CONFIDENTIAL INFORMATION. IT SHALL BE USED ONLY AS APPROVED BY MP PUMPS AND SHALL NOT BE GIVEN TO OTHERS OR COPIED WITHOUT THE WRITTEN CONSENT OF MP PUMPS. RETURN TO MP PUMPS PROMPTLY WHEN REQUESTED.

CF5 PED

G				
F				
E				
D				
C				
B				
A				
REV	DESCRIPTION	DRAWN	DATE	EN

UNLESS OTHERWISE NOTED
THIRD ANGLE PROJECTION

2 PLACE DIM ± .020
3 PLACE DIM ± .010
ANGULAR DIM ± 1°

DO NOT SCALE

MP PUMPS, INC.
FRASER, MICHIGAN 48026, U.S.A.

MATERIAL SPECS

Drawn by	Date Drawn	APPROV.	SCALE	MADE FOR	MADE IN
C.C.	12/10/18	D.D.			

NAME: CF5PMP SS:PED 4.75 T-2100

Drawing no: 33187