DRAWING NO
MP30885

www.PumpAgents.com

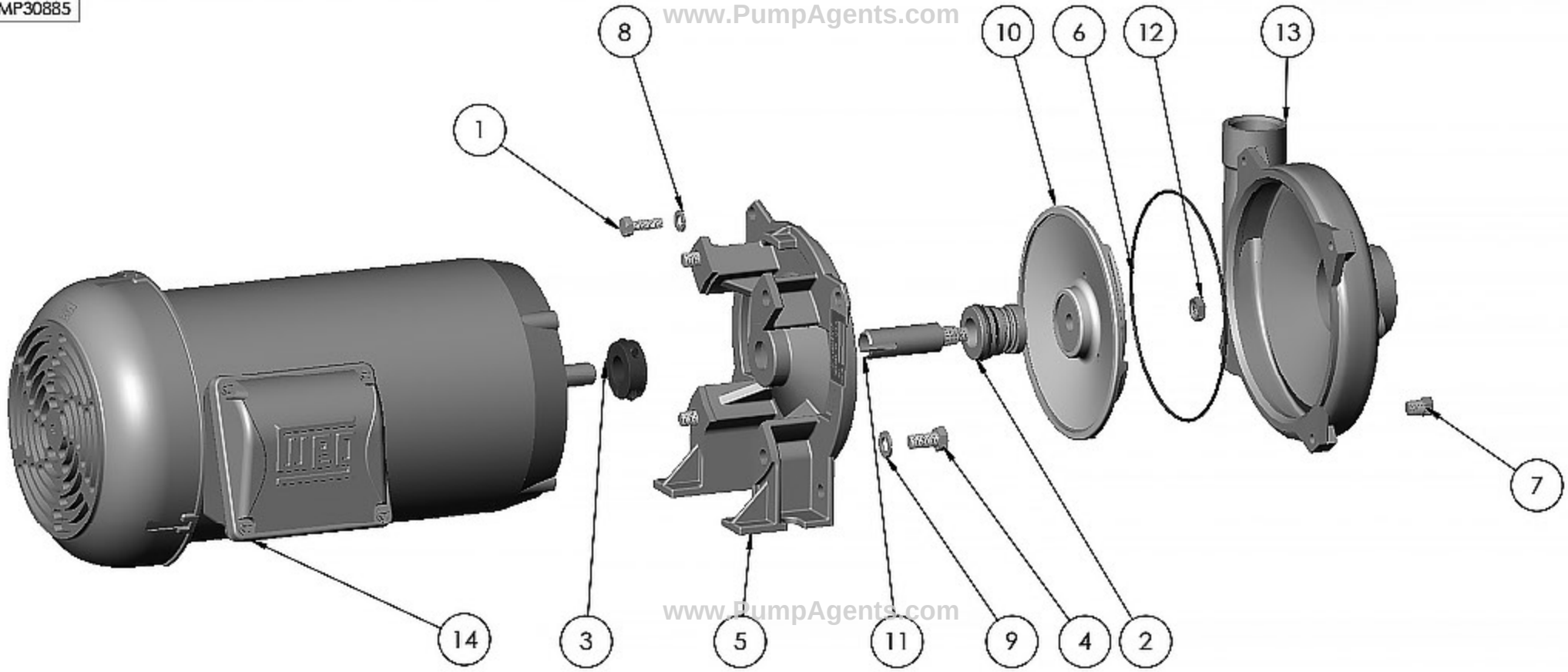

www.PumpAgents.com

ITEM NO.	PART NUMBER	DESCRIPTION	MATERIAL	QTY.
1	MP21242	CAP SCREW HH 5/16-18 X 7/8	304 SS	4
2	MP30061	SEAL ASSY T-2100	CCS VITON	1
3	MP28049	CLAMP	ZINC PLATED STEEL	1
4	MP25663	CAPSCREW 3/8-16 X 3/4	304 SS	4
5	MP29908	ADAPTER	CF8M SS	1
6	MP29715	O RING AS 568-162	VITON	1
7	MP21255	PIPE PLUG 1/8" NPT	STEEL	1
8	MP21238	LOCKWASHER 5/16 X 18	304 SS	4
9	MP21266	LOCKWASHER 3/8 X 1/8	304 SS	4
10	MP29910	IMP SS MACH:CF1 A-6.0	316 SS	1
11	MP29785	DRIVE SLEEVE	316 SS	1
12	MP35598	HEX JAM NUT SS: 3/8-24	316 SS	1
13	MP39027	HOUSING CF1-2	316 SS	1
14	MP26197	EL MTR 3HP, 3PH, 56C	TEFC	1

REV	DESCRIPTION	DRAWN	DATE	EN
G				
F				
E				
D				
C				
B				
A	ECN# 113331S UPDATE DRAWING TO SHOW CURRENT MOTOR	CC	4/7/20	CC

UNLESS OTHERWISE NOTED
THIRD ANGLE PROJECTION

DO NOT SCALE

MP PUMPS, INC.
FRASER, MICHIGAN 48026, U.S.A.

MATERIAL: STAINLESS STEEL

DRAWN BY	DATE COMP.	APPROV.	SCALE	MADE FOR	MADE FROM
C.W.	4-1-14	JAM	FULL		

NAME: SERV. PARTS CF1 PUMP ASSY.

DRAWING NO: **MP30885**

NOTE: THIS DRAWING OR PRINT, PROPERTY OF MP PUMPS INC., CONTAINS PROPRIETARY AND CONFIDENTIAL INFORMATION. IT SHALL BE USED ONLY AS APPROVED BY MP PUMPS AND SHALL NOT BE GIVEN TO OTHERS OR COPIED WITHOUT THE WRITTEN CONSENT OF MP PUMPS. RETURN TO MP PUMPS PROMPTLY WHEN REQUESTED.