Drawing No
30336

www.PumpAgents.com

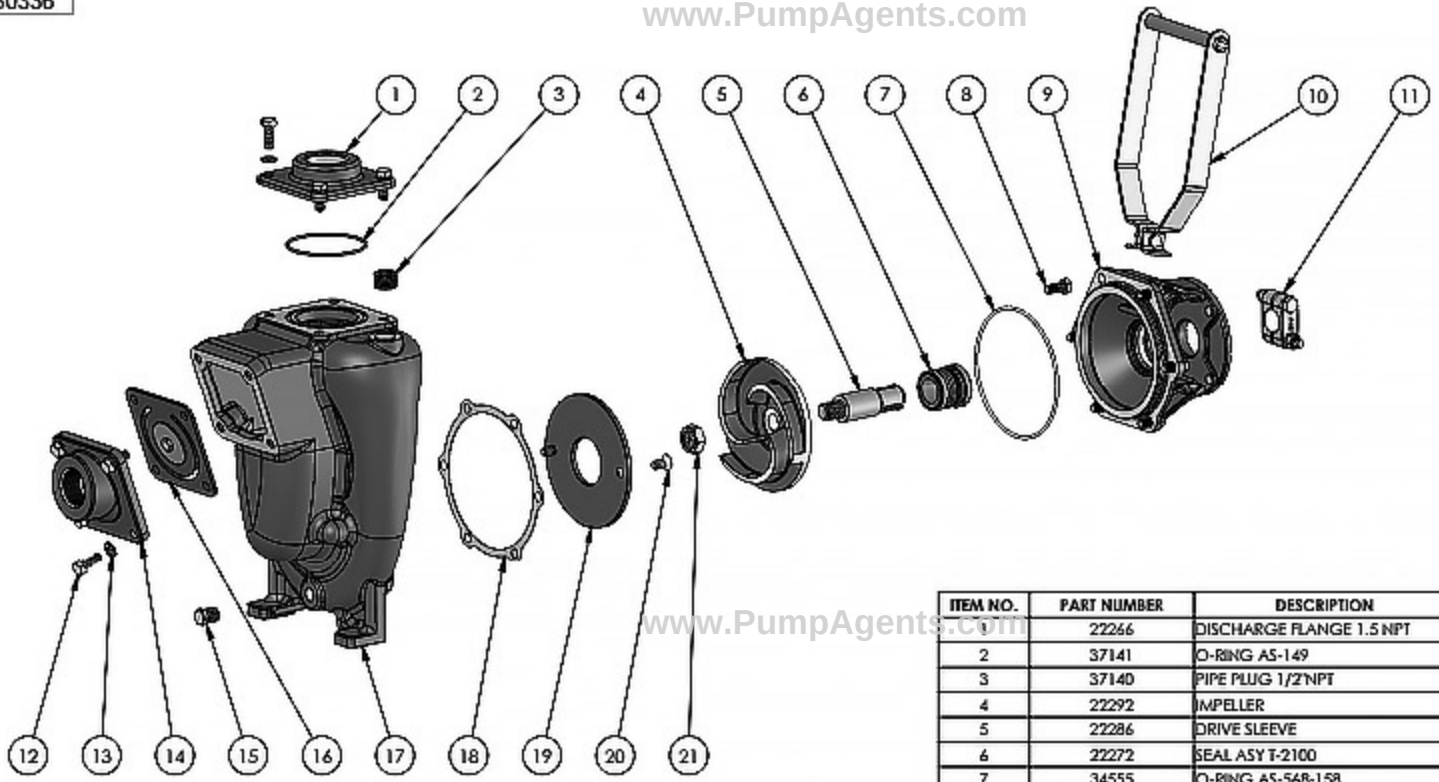

www.PumpAgents.com

ITEM NO.	PART NUMBER	DESCRIPTION	MATERIAL	QTY.
1	22266	DISCHARGE FLANGE 1.5 NPT	CAST IRON	1
2	37141	O-RING AS-149	VITON	1
3	37140	PIPE PLUG 1/2"NPT	ZINC PLATED STEEL	1
4	22292	IMPELLER	FEDERALLOY I-836	1
5	22286	DRIVE SLEEVE	303 SS	1
6	22272	SEAL ASY T-2100	CCS VITON	1
7	34555	O-RING AS-568-158	VITON	1
8	24965	CAPSCREW: 5/16-18X3/4 PATCH	304 SS	6
9	22247	ADAPTER	CAST IRON	1
10	39768	HANDLE KIT	ZINC PLATED STEEL	1
11	23002	CLAMP ASSEMBLY	303 SS	1
12	21242	CAP SCREW HH 5/16-18 X 7/8	304 SS	8
13	21238	LOCKWASHER 5/16 X 18	304 SS	10
14	22263	SUCTION FLANGE 1.5 NPT	CAST IRON	1
15	41475	PIPE PLUG:1/4 NPT	STEEL	1
16	23022	FLAPPER ASSEMBLY	BUNA	1
17	22251	HOUSING	CAST IRON	1
18	22255	GASKET	LEXIDE NI-2085	1
19	22259	WEAR PLATE	BRASS	1
20	37137	SCREW FHS 5/16-18 X 5/8	304 SS	2
21	22655	HEX JAM NUT 5/8-18	304 SS	1

G				
F				
E				
D				
C				
B				
A				
REV	DESCRIPTION	DRAWN	DATE	EN

UNLESS OTHERWISE NOTED
THIRD ANGLE PROJECTION

2 PLACE DIM ± .020
3 PLACE DIM ± .010
ANGULAR DIM ± 1°

DO NOT SCALE

MP PUMPS, INC.
FRASER, MICHIGAN 48026, U.S.A.

MATERIAL SPECS

DRAWN BY	DATE COMP.	APPROV.	SCALE	MADE FOR	MADE FROM
S.F.	6/26/17	D.D.			

NAME: FMSPPK C:PEM 3/4 5.0BI BWP

DRAWING NO: 30336

NOTE: THIS DRAWING OR PART PROPERTY OF MP PUMPS, INC., CONTAINS PROPRIETARY AND CONFIDENTIAL INFORMATION. IT SHALL BE USED ONLY AS APPROVED BY MP PUMPS AND SHALL NOT BE GIVEN TO OTHERS OR COPIED WITHOUT THE WRITTEN CONSENT OF MP PUMPS. RETURN TO MP PUMPS PROMPTLY WHEN REQUESTED.