DRAWING NO
30254

www.PumpAgents.com

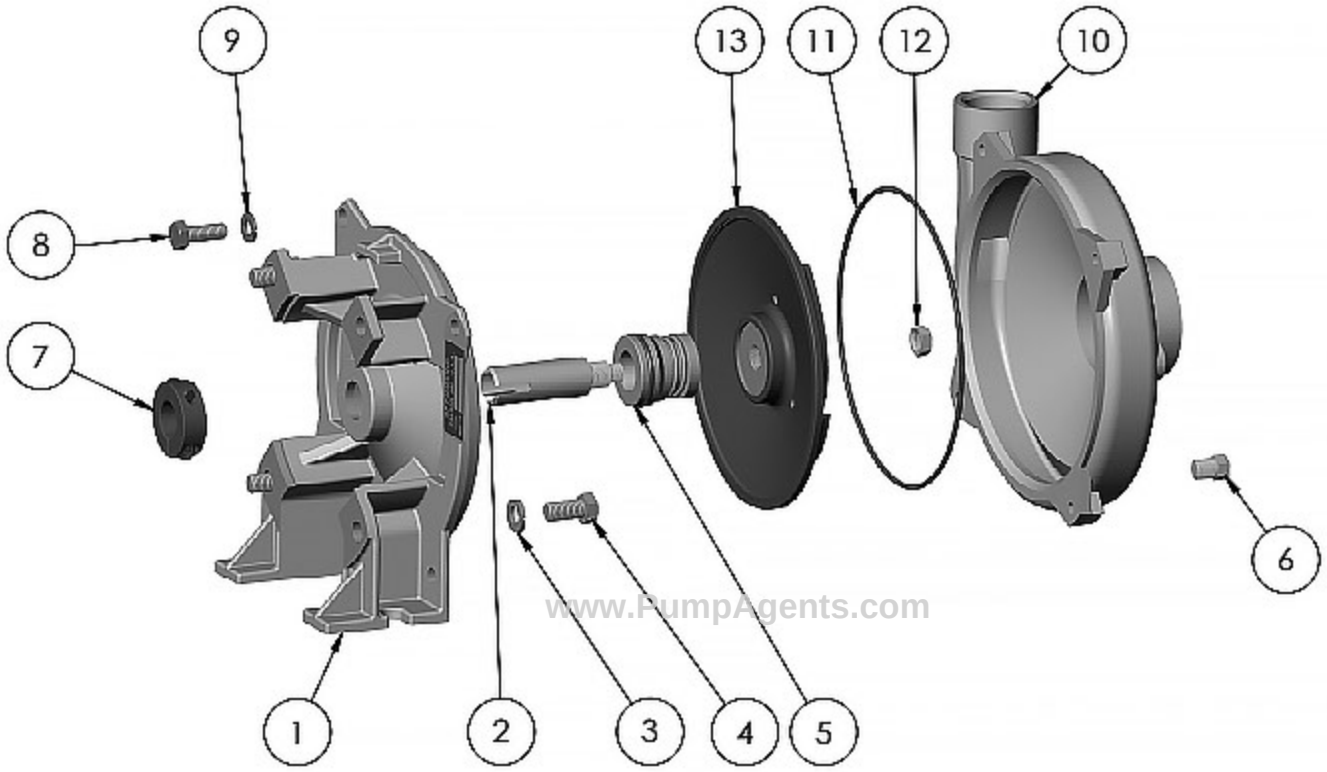

www.PumpAgents.com

ITEM NO.	PART NUMBER	DESCRIPTION	MATERIAL	QTY.
1	29908	ADAPTER MACH CHEMFLO 1-4	316 STAINLESS STEEL	1
2	29785	DRIVE SLEEVE - CHEMFLO 56C	316 STAINLESS STEEL	1
3	21266	LOCKWASHER 3/8 X 1/8	STAINLESS STEEL	4
4	25663	CAPSCREW 3/8-16 X 3/4	STAINLESS STEEL	4
5	30061	SEAL ASSY T-2100	CCS VITON	1
6	21255	PIPE PLUG 1/8" NPT	316 STAINLESS STEEL	1
7	28049	DRIVE CLAMP	STEEL	1
8	21242	CAP SCREW HH 5/16-18 X 7/8	304 STAINLESS STEEL	4
9	21238	LOCKWASHER 5/16 X 18	304 STAINLESS STEEL	4
10	39027	HOUSING CF1-2	316 STAINLESS STEEL	1
11	29715	O RING AS 568-162	VITON	1
12	35598	HEX JAM NUT SS: 3/8-24	316 STAINLESS STEEL	1
13	29910	IMPELLER Ø6.00 MACH!	316 STAINLESS STEEL	1

REV	DESCRIPTION	DRAWN	DATE	EN
G				
F				
E				
D				
C				
B				
A				

UNLESS OTHERWISE NOTED
THIRD ANGLE PROJECTION

DO NOT SCALE

MP PUMPS, INC.
FRASER, MICHIGAN 48026, U.S.A.

MATERIAL: STAINLESS STEEL

DRAWN BY	DATE COMP.	APPROV.	SCALE	MADE FOR	MADE FROM
C.W.	3-27-14	JAM	FULL		

NAME: SERV. PARTS CF1 PUMPAK

DRAWING NO: 30254

NOTE: THIS DRAWING OR PRINT, PROPERTY OF MPPUMPS INC. CONTAINS PROPRIETARY AND CONFIDENTIAL INFORMATION. IT SHALL BE USED ONLY AS APPROVED BY MPPUMPS AND SHALL NOT BE GIVEN TO OTHERS OR COPIED WITHOUT THE WRITTEN CONSENT OF MPPUMPS. RETURN TO MPPUMPS PROMPTLY WHEN REQUESTED.