DRAWING NO
29566

www.PumpAgents.com

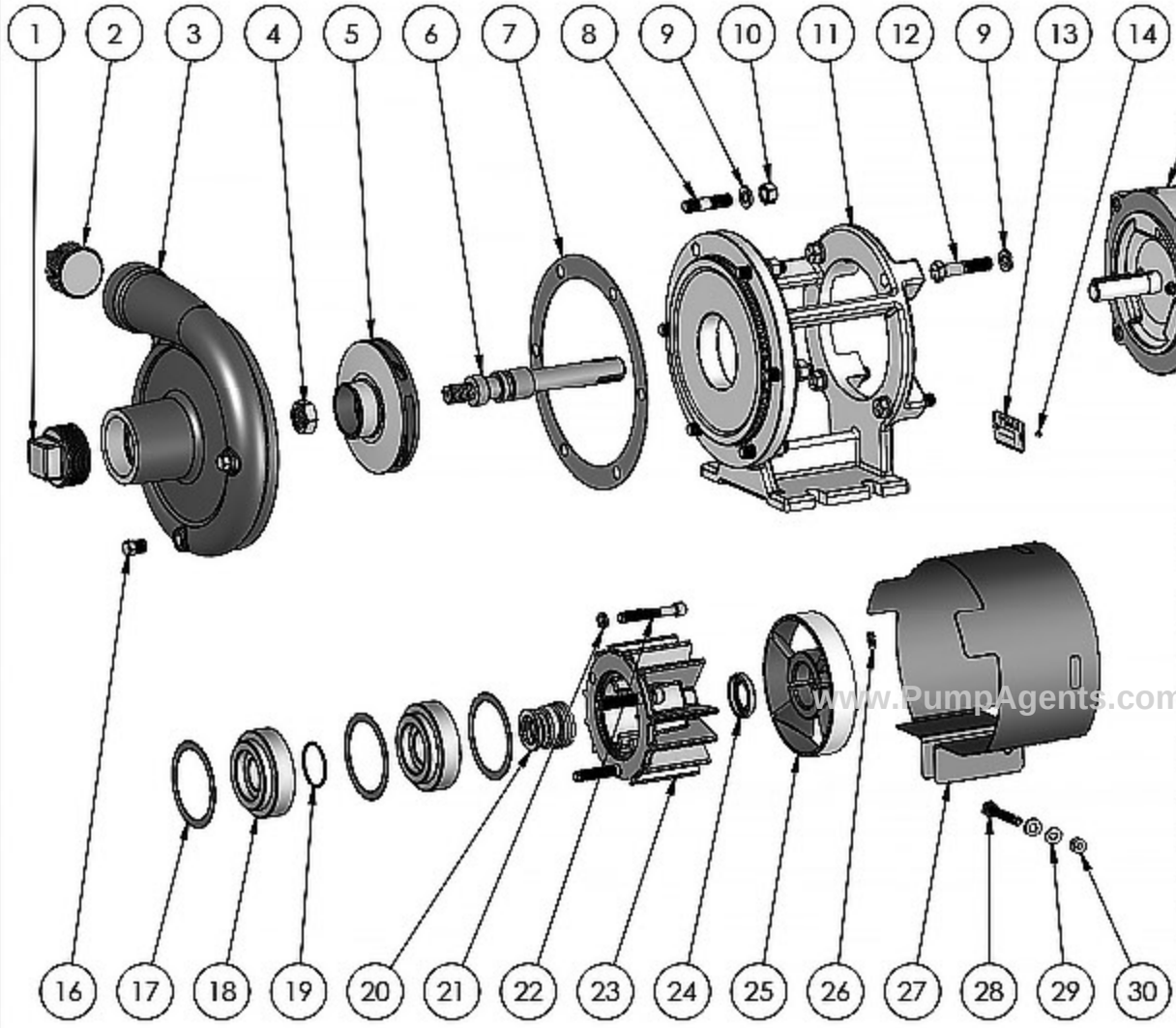

ITEM NO.	PART NUMBER	DESCRIPTION	MATERIAL	QTY.
1	41484	PIPE PLUG 1.5 NPT	CAST IRON	1
2	27205	PIPE PLUG 1.25 NPT	CAST IRON	1
3	25666	HOUSING	DUCTILE IRON	1
4	22655	HEX JAM NUT 5/8-18	304 SS	1
5	29565	IMPELLER Ø4.250	CAST IRON	1
6	29166	DRIVE SLEEVE	303 SS	1
7	31518	GASKET .032X6	GRAFOIL	1
8	21261	STUD 3/8-16X1.63	304 SS	6
9	21266	LOCKWASHER 3/8 X 1/8	304 SS	10
10	21268	HEXNUT 3/8-16	304 SS	6
11	29160	ADAPTOR	DUCTILE IRON	1
12	41259	CAPSCREW 3/8-16X1.75	STEEL	4
13	21183	NAME PLATE	ALUMINUM	1
14	21122	DRIVE SCREW	304 SS	2
15	25862	ELECTRIC MOTOR	TEFC	1
16	21585	PIPE PLUG 1/8 NPT	ZPS	2
17	29165	GASKET	GARLOCK	3
18	29158	ISOLATOR	CG	2
19	29230	O-RING 1.301ID X .070	VITON	1
20	29168	SEAL ASSEMBLY	CAR/SIC	1
21	29765	WASHER FLAT .50X.327X.093	STEEL	3
22	29178	CAPSCREW 5/16-18X2.0	STEEL	3
23	29162	HOUSING SEAL	DUCTILE IRON	1
24	29167	LIPSEAL	VITON	1
25	29164	CLAMP FAN	DUCTILE IRON	1
26	33417	SET SCREW 1/4-28X1/2	STEEL	1
27	33273	SHIELD	ZPS	1
28	33B10	CAPSCREW 1/4-20X1.75	ZPS	1
29	27261	WASHER	STEEL	2
30	21241	HEXNUT 1/4-20	304 SS	1

REV	DESCRIPTION	DRAWN	DATE	EN
G				
F				
E				
D				
C				
B				
A				

UNLESS OTHERWISE NOTED
THIRD ANGLE PROJECTION

2 PLACE DIM ± .020
3 PLACE DIM ± .010
ANGULAR DIM ± 1°

DO NOT SCALE

MP PUMPS, INC.
FRASER, MICHIGAN 48026, U.S.A.

MATERIAL | MATERIAL SPECS

DRAWN BY	DATE DRAWN	APPROV.	SCALE	MADE FOR	MADE FROM
S.F.	9/21/17	D.D.			

NAME: HTO80PMP D:1-3 56C 208/460 4.25 HD

DRAWING NO: 29566

NOTE: THIS DRAWING OR PRINT, PROPERTY OF MP PUMPS INC., CONTAINS PROPRIETARY AND CONFIDENTIAL INFORMATION. IT SHALL BE USED ONLY AS APPROVED BY MP PUMPS AND SHALL NOT BE GIVEN TO OTHERS OR COPIED WITHOUT THE WRITTEN CONSENT OF MP PUMPS. RETURN TO MP PUMPS PROMPTLY WHEN REQUESTED.