DRAWING NO
28942

www.PumpAgents.com

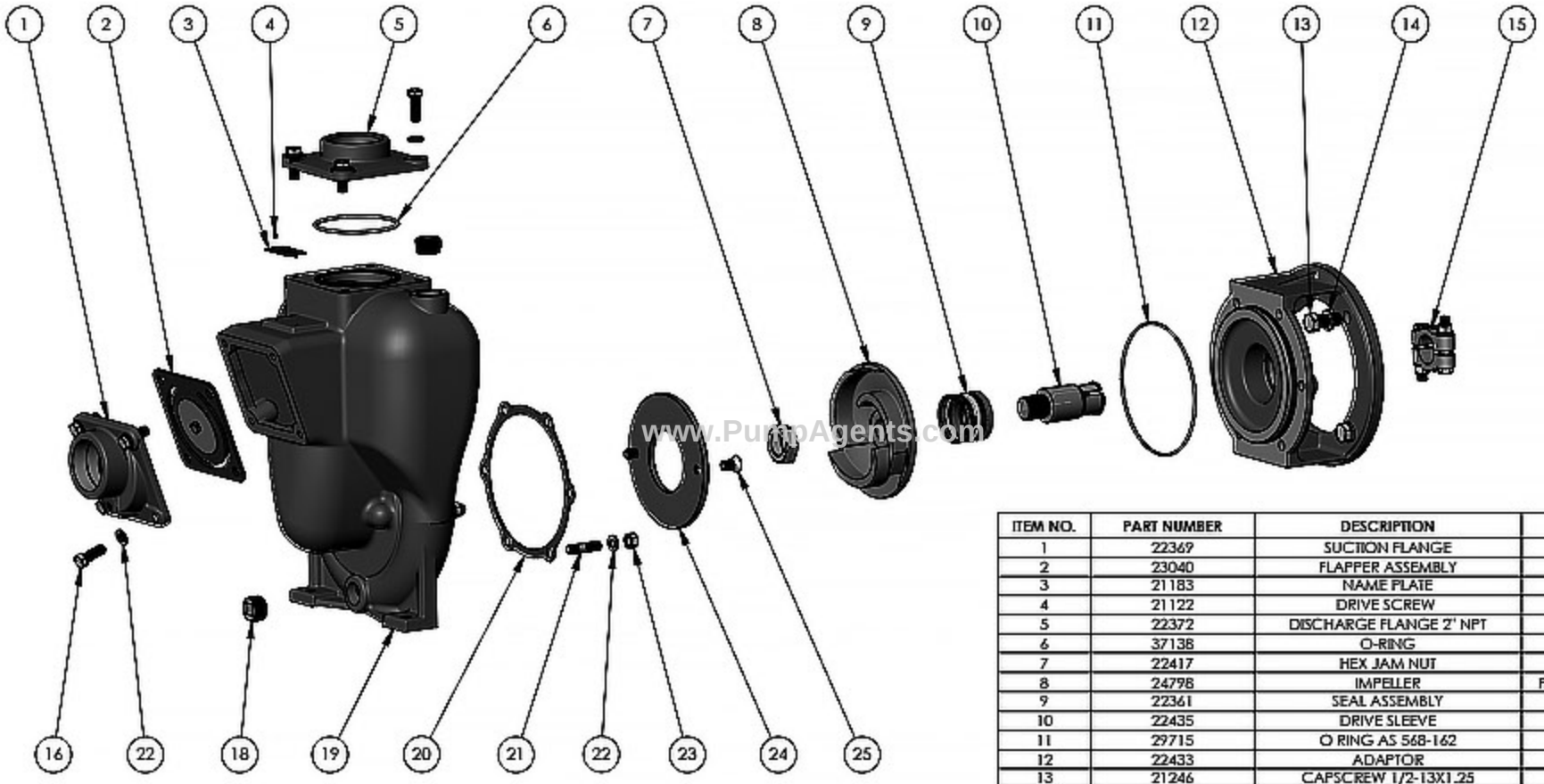


| ITEM NO. | PART NUMBER | DESCRIPTION | MATERIAL | QTY. |
|---|---|---|---|---|
| 1 | 22369 | SUCTION FLANGE | CAST IRON | 1 |
| 2 | 23040 | FLAPPER ASSEMBLY | NITRILE/SS | 1 |
| 3 | 21183 | NAME PLATE | ALUMINUM | 1 |
| 4 | 21122 | DRIVE SCREW | 304 SS | 2 |
| 5 | 22372 | DISCHARGE FLANGE 2" NPT | CAST IRON | 1 |
| 6 | 37138 | O-RING | VITON | 1 |
| 7 | 22417 | HEX JAM NUT | 304 SS | 1 |
| 8 | 24798 | IMPELLER | FEDERALLOY I-836 | 1 |
| 9 | 22361 | SEAL ASSEMBLY | CCS/VITON | 1 |
| 10 | 22435 | DRIVE SLEEVE | 303 SS | 1 |
| 11 | 29715 | O RING AS 568-162 | VITON | 1 |
| 12 | 22433 | ADAPTOR | CAST IRON | 1 |
| 13 | 21246 | CAPSCREW 1/2-13X1.25 | 304 SS | 4 |
| 14 | 21254 | LOCKWASHER 1/2" | 304 SS | 4 |
| 15 | 23039 | CLAMP ASSEMBLY | 303 SS | 1 |
| 16 | 21291 | CAPSCREW 3/8-16X1.13 | 304 SS | 8 |
| 18 | 41481 | PIPE PLUG | 316 SS | 2 |
| 19 | 22351 | HOUSING | CAST IRON | 1 |
| 20 | 22240 | GASKET | LEXIDE NI-2085 | 1 |
| 21 | 21261 | STUD 3/8-16X1.63 | 304 SS | 6 |
| 22 | 21266 | LOCKWASHER 3/8 X 1/8 | 304 SS | 14 |
| 23 | 21268 | HEXNUT 3/8-16 | 304 SS | 6 |
| 24 | 22243 | WEAR PLATE | BRASS | 1 |
| 25 | 37115 | SCREW FHS 3/8-16X3/4 | 304 SS | 2 |

| REV | DESCRIPTION | DRAWN | DATE | EN |
|---|---|---|---|---|
| G | | | | |
| F | | | | |
| E | | | | |
| D | | | | |
| C | | | | |
| B | | | | |
| A | | | | |

UNLESS OTHERWISE NOTED
THIRD ANGLE PROJECTION

2 PLACE DIM ± .020
3 PLACE DIM ± .010
ANGULAR DIM ± 1°

DO NOT SCALE

**MP PUMPS, INC.**
FRASER, MICHIGAN 48026, U.S.A.

MATERIAL: MATERIAL SPECS

| DRAWN BY | DATE COMP. | APPROV. | SCALE | MADE FOR | MADE FROM |
|---|---|---|---|---|---|
| S.F. | 1/31/19 | G.D. | FULL | | |

NAME: FM10PPK C:CCMTR 1.13 5.5BI BWP

DRAWING NO: 28942

NOTE: THIS DRAWING OR PRINT, PROPERTY OF MP PUMPS INC. CONTAINS PROPRIETARY AND CONFIDENTIAL INFORMATION. IT SHALL BE USED ONLY AS APPROVED BY MP PUMPS AND SHALL NOT BE GIVEN TO OTHERS OR COPIED WITHOUT THE WRITTEN CONSENT OF MP PUMPS. RETURN TO MP PUMPS PROMPTLY WHEN REQUESTED.