DRAWING NO
28940

www.PumpAgents.com

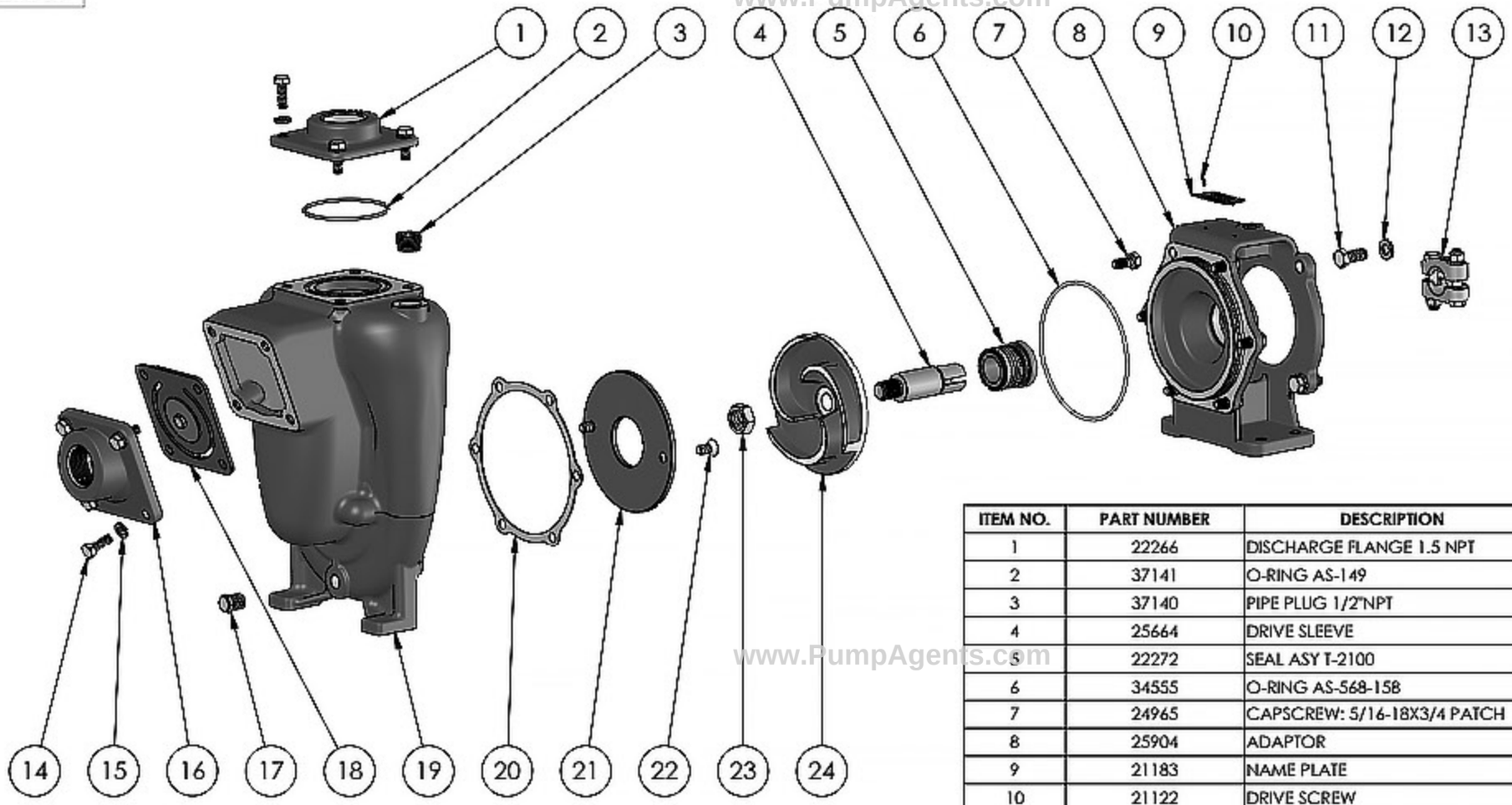

www.PumpAgents.com

ITEM NO.	PART NUMBER	DESCRIPTION	MATERIAL	QTY.
1	22266	DISCHARGE FLANGE 1.5 NPT	CAST IRON	1
2	37141	O-RING AS-149	VITON	1
3	37140	PIPE PLUG 1/2"NPT	ZINC PLATED STEEL	1
4	25664	DRIVE SLEEVE	303 SS	1
5	22272	SEAL ASY T-2100	CCS VITON	1
6	34555	O-RING AS-568-158	VITON	1
7	24965	CAPSCREW: 5/16-18X3/4 PATCH	304 SS	6
8	25904	ADAPTOR	CAST IRON	1
9	21183	NAME PLATE	ALUMINUM	1
10	21122	DRIVE SCREW	304 SS	2
11	21251	CAPSCREW: 3/8-16X7/8	304 SS	4
12	21266	LOCKWASHER 3/8 X 1/8	304 SS	4
13	23003	CLAMP ASSEMBLY	303 SS	1
14	21242	CAP SCREW HH 5/16-18 X 7/8	304 SS	8
15	21238	LOCKWASHER 5/16 X 18	304 SS	10
16	22263	SUCTION FLANGE 1.5 NPT	CAST IRON	1
17	41475	PIPE PLUG:1/4 NPT	STEEL	1
18	23022	FLAPPER ASSEMBLY	BUNA	1
19	22251	HOUSING	CAST IRON	1
20	22255	GASKET	LEXIDE NI-2085	1
21	22259	WEAR PLATE	BRASS	1
22	37137	SCREW FHS 5/16-18 X 5/8	304 SS	2
23	22655	HEX JAM NUT 5/8-18	304 SS	1
24	22292	IMPELLER	FEDERALLOY I-836	1

REV	DESCRIPTION	DRAWN	DATE	QU
G				
F				
E				
D				
C				
B				
A				

UNLESS OTHERWISE NOTED
THIRD ANGLE PROJECTION

2 PLACE DIM ± .020
3 PLACE DIM ± .010
ANGULAR DIM ± 1°

DO NOT SCALE

MP PUMPS, INC.
FRASER, MICHIGAN 48026, U.S.A.

MATERIAL: MATERIAL SPECS

DRAWN BY	DATE COMP.	APPROV.	SCALE	MADE FOR	MADE FROM
S.F.	6/19/17	D.D.			

NAME: FM5PPK C:CCMTR 7/8 FA 5.0BI BWP

DRAWING NO: 28940

NOTE: THIS DRAWING OR PRINT, PROPERTY OF MP PUMPS INC., CONTAINS PROPRIETARY AND CONFIDENTIAL INFORMATION. IT SHALL BE USED ONLY AS APPROVED BY MP PUMPS AND SHALL NOT BE GIVEN TO OTHERS OR COPIED WITHOUT THE WRITTEN CONSENT OF MP PUMPS. RETURN TO MP PUMPS PROMPTLY WHEN REQUESTED.