DRAWING NO
26301

www.PumpAgents.com

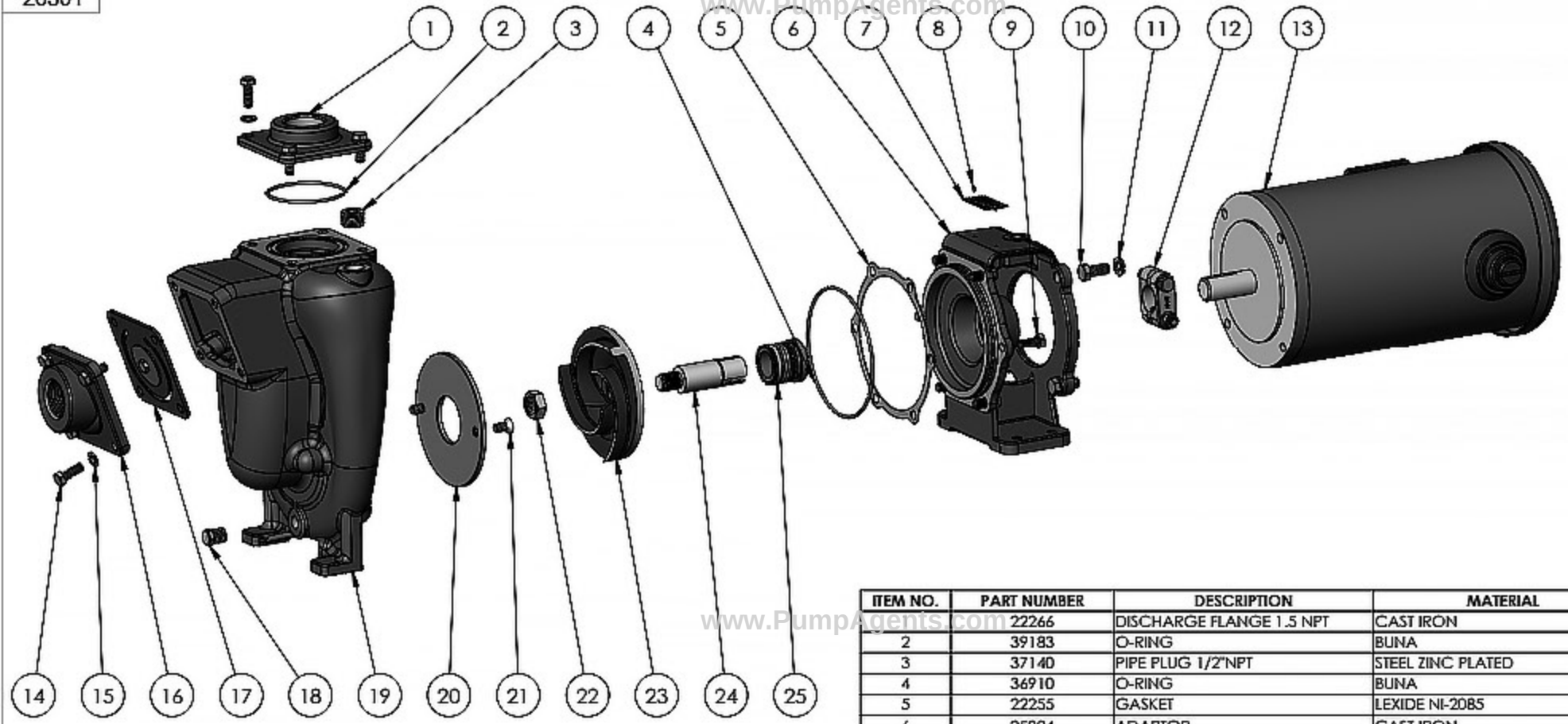

www.PumpAgents.com

ITEM NO.	PART NUMBER	DESCRIPTION	MATERIAL	QTY.
1	22266	DISCHARGE FLANGE 1.5 NPT	CAST IRON	1
2	39183	O-RING	BUNA	1
3	37140	PIPE PLUG 1/2"NPT	STEEL ZINC PLATED	1
4	36910	O-RING	BUNA	1
5	22255	GASKET	LEXIDE NI-2085	1
6	25904	ADAPTOR	CAST IRON	1
7	21183	NAME PLATE	ALUMINUM	1
8	21122	DRIVE SCREW	STAINLESS STEEL	2
9	24965	CAPSCREW: 5/16-18X3/4 PATCH	304 STAINLESS STEEL	6
10	21251	CAPSCREW: 3/8-16X7/8	304 STAINLESS STEEL	4
11	21266	LOCKWASHER 3/8 X 1/8	304 STAINLESS STEEL	4
12	23003	CLAMP ASSEMBLY	303 STAINLESS STEEL	1
13	25920	ELECTRIC MOTOR	TEFC	1
14	21242	CAP SCREW HH 5/16-18 X 7/8	304 STAINLESS STEEL	8
15	21238	LOCKWASHER 5/16 X 1/8	304 STAINLESS STEEL	10
16	22263	SUCTION FLANGE 1.5 NPT	CAST IRON	1
17	23022	FLAPPER ASSEMBLY	BUNA	1
18	41475	PIPE PLUG:1/4 NPT	STEEL	1
19	22251	HOUSING	CAST IRON	1
20	22260	WEAR PLATE	STEEL	1
21	37137	SCREW FHS 5/16-18 X 5/8	304 STAINLESS STEEL	2
22	22655	HEX JAM NUT 5/8-18	304 STAINLESS STEEL	1
23	22293	IMPELLER	CAST IRON	1
24	25664	DRIVE SLEEVE	303 STAINLESS STEEL	1
25	22273	SEAL ASSEMBLY 1" T-2100	CCS VITON	1

REV	DESCRIPTION	DRAWN	DATE	EN
G				
F				
E				
D				
C				
B				
A				

UNLESS OTHERWISE NOTED
THIRD ANGLE PROJECTION

2 PLACE DIM ± .020
3 PLACE DIM ± .010
ANGULAR DIM ± 1°

DO NOT SCALE

MP PUMPS, INC.
FRASER, MICHIGAN 48026, U.S.A.

MATERIAL: MATERIAL SPECS

DRAWN BY	DATE COMP.	APPROV.	SCALE	MADE FOR	MADE FROM
SF	12/20/16	D.D.			

NAME: FM5PMP C:3-3 145TC FA 5.0

DRAWING NO: 26301

NOTE: THIS DRAWING OR PRINT, PROPERTY OF MP PUMPS INC., CONTAINS PROPRIETARY AND CONFIDENTIAL INFORMATION. IT SHALL BE USED ONLY AS APPROVED BY MP PUMPS AND SHALL NOT BE GIVEN TO OTHERS OR COPIED WITHOUT THE WRITTEN CONSENT OF MP PUMPS. RETURN TO MP PUMPS PROMPTLY WHEN REQUESTED.