DRAWING NO
MP24186

www.PumpAgents.com

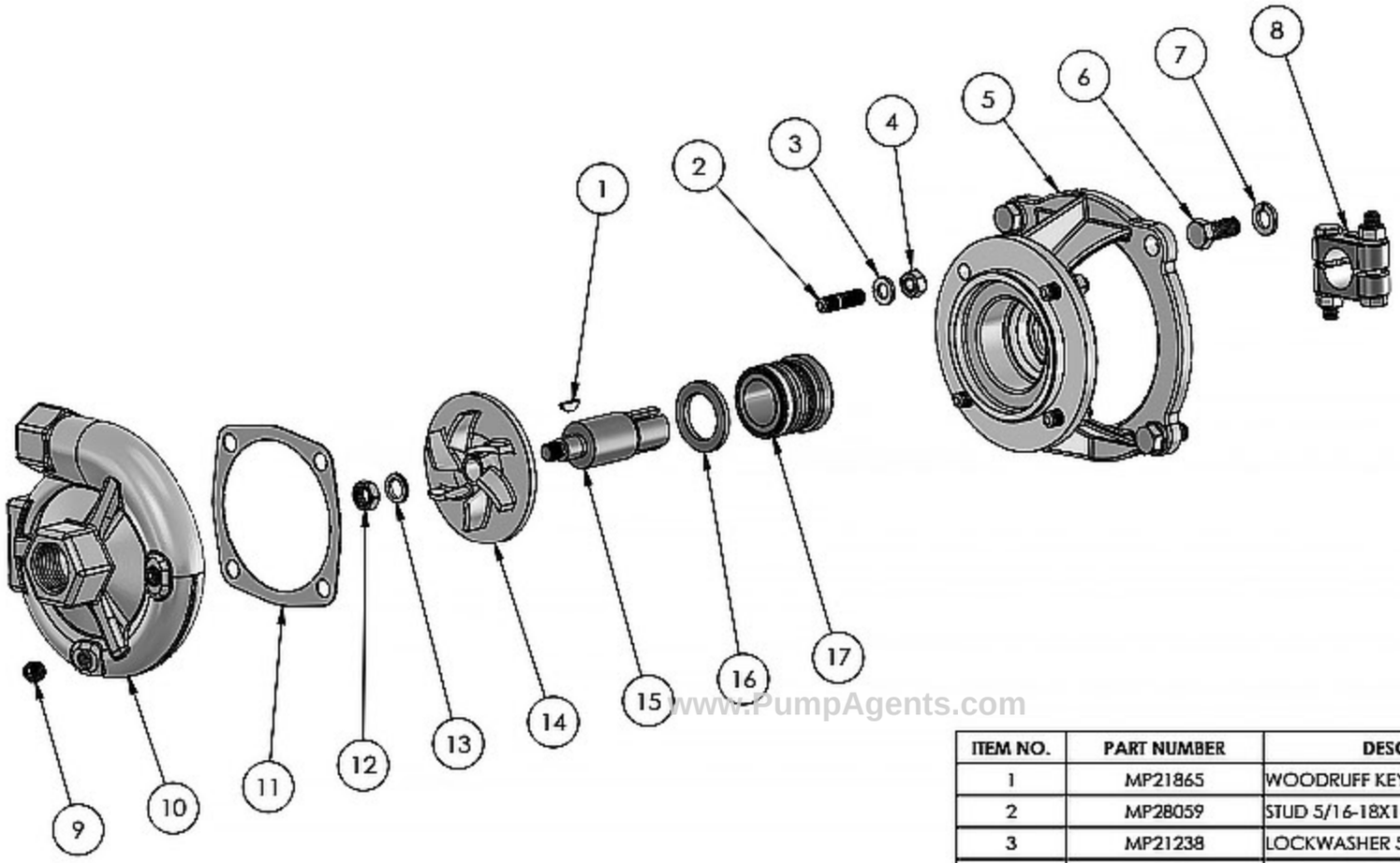

www.PumpAgents.com

ITEM NO.	PART NUMBER	DESCRIPTION	MATERIAL	QTY.
1	MP21865	WOODRUFF KEY	304 SS	1
2	MP28059	STUD 5/16-18X1.19	304 SS	4
3	MP21238	LOCKWASHER 5/16 X 18	304 SS	6
4	MP21284	HEXNUT 5/16-18X1/2	304 SS	6
5	MP22129	ADAPTER	FEDERALLOY I-836	1
6	MP21251	CAPSCREW: 3/8-16X7/8	304 SS	4
7	MP21266	LOCKWASHER 3/8 X 1/8	304 SS	4
8	MP23002	CLAMP ASSEMBLY	303 SS	1
9	MP21185	PIPE PLUG 1/8" NPT	LEAD FREE BRASS	2
10	MP21106	HOUSING	FEDERALLOY I-836	1
11	MP21126	GASKET	NI-2085	1
12	MP22588	LOCK NUT 3/8-24	304 SS	1
13	MP31224	LOCKWASHER	316 SS	1
14	MP22142	IMPELLER	FEDERALLOY I-836	1
15	MP22131	DRIVE SLEEVE	303 SS	1
16	MP31103	WASHER 1.56 X 1.003 X .130	303 SS	1
17	MP22272	SEAL ASSEMBLY	CCS VITON	1

REV	DESCRIPTION	DRAWN	DATE	EN
G				
F				
E				
D				
C				
B				
A	UDPATED DWG ECN 1138510	SF	2/16/21	BB

UNLESS OTHERWISE NOTED
THIRD ANGLE PROJECTION

2 PLACE DIM ± .020
3 PLACE DIM ± .010
ANGULAR DIM ± 1°

DO NOT SCALE

MP PUMPS, INC.
FRASER, MICHIGAN 48026, U.S.A.

MATERIAL: MATERIAL SPECS

DRAWN BY	DATE COMP.	APPROV.	SCALE	MADE FOR	MADE FROM
SF	2/16/21	BB			

NAME: S30PPK B:RR 1X3/4 CFR 5/8 2.5 HD

DRAWING NO: MP24186

NOTE: THIS DRAWING OR PRINT PROPERTY OF MP PUMPS INC., CONTAINS PROPRIETARY AND CONFIDENTIAL INFORMATION. IT SHALL BE USED ONLY AS APPROVED BY MP PUMPS AND SHALL NOT BE GIVEN TO OTHERS OR COPIED WITHOUT THE WRITTEN CONSENT OF MP PUMPS. RETURN TO MP PUMPS PROMPTLY WHEN REQUESTED.