DRAWING NO
22731

www.PumpAgents.com

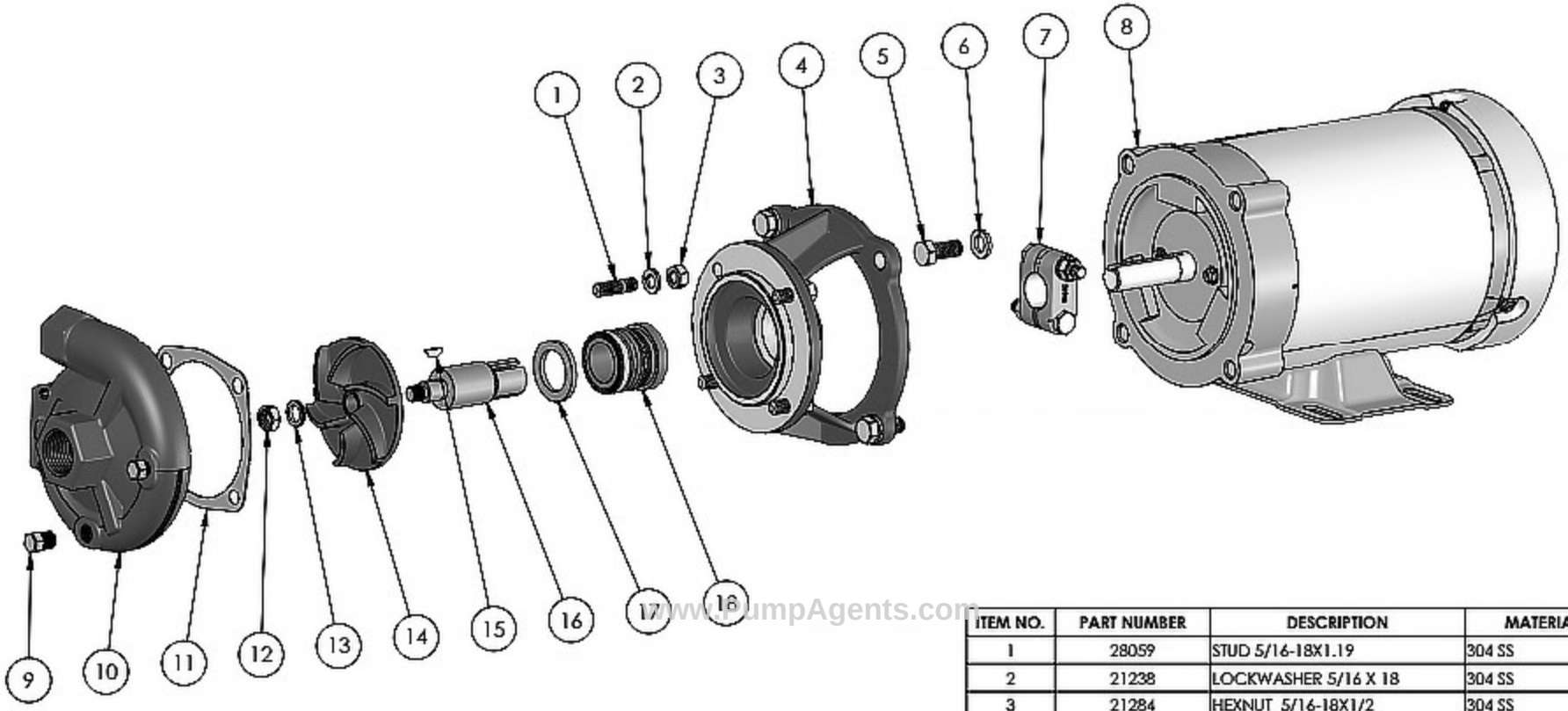

www.PumpAgents.com

ITEM NO.	PART NUMBER	DESCRIPTION	MATERIAL	QTY.
1	28059	STUD 5/16-18X1.19	304 SS	4
2	21238	LOCKWASHER 5/16 X 18	304 SS	6
3	21284	HEXNUT 5/16-18X1/2	304 SS	6
4	22130	ADAPTER	CAST IRON	1
5	21251	CAPSCREW: 3/8-16X7/8	304 SS	4
6	21266	LOCKWASHER 3/8 X 1/8	304 SS	4
7	23002	CLAMP ASSEMBLY	303 SS	1
8	22490	ELECTRIC MOTOR	TEFC	1
9	21585	PIPE PLUG 1/8 NPT	ZPS	2
10	21107	HOUSNG	DUCTILE IRON	1
11	21126	GASKET	NI-2085	1
12	22588	LOCK NUT 3/8-24	304 SS	1
13	31224	LOCKWASHER	316 SS	1
14	22573	IMPELLER	CAST IRON	1
15	21865	WOODRUFF KEY	304 SS	1
16	22131	DRIVE SLEEVE	303 SS	1
17	31103	WASHER 1.56 X 1.003 X .130	303 SS	1
18	22272	SEAL ASY T-2100	CCS VITON	1

REV	DESCRIPTION	DRAWN	DATE	EN
G				
F				
E				
D				
C				
B				
A				

UNLESS OTHERWISE NOTED
THIRD ANGLE PROJECTION

2 PLACE DIM. ± .020
3 PLACE DIM. ± .010
ANGULAR DIM. ± 1°

DO NOT SCALE

MP PUMPS, INC.
FRASER, MICHIGAN 48026, U.S.A.

MATERIAL: MATERIAL SPECS

DRAWN BY	DATE COMP.	APPROV.	SCALE	MADE FOR	MADE FROM
SF	7/30/18	DD			

NAME: S30PMP C:3/4-3 56C 208/460 3.25 HD

DRAWING NO: 22731

NOTE: THIS DRAWING OR PRINT, PROPERTY OF MP PUMPS INC., CONTAINS PROPRIETARY AND CONFIDENTIAL INFORMATION. IT SHALL BE USED ONLY AS APPROVED BY MP PUMPS AND SHALL NOT BE GIVEN TO OTHERS OR COPIED WITHOUT THE WRITTEN CONSENT OF MP PUMPS. RETURN TO MP PUMPS PROMPTLY WHEN REQUESTED.