DRAWING NO
31962

www.PumpAgents.com

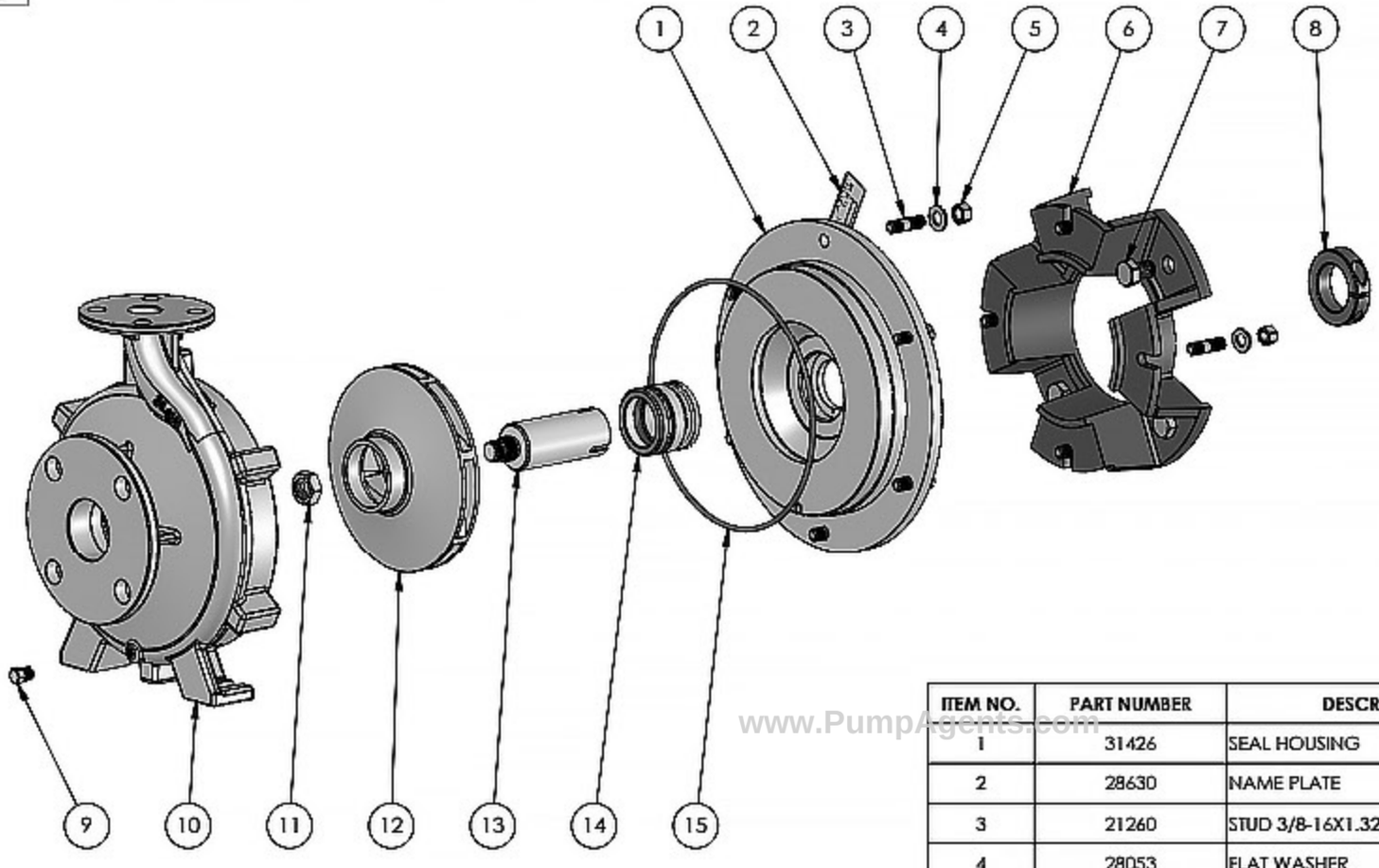

www.PumpAgents.com

ITEM NO.	PART NUMBER	DESCRIPTION	MATERIAL	QTY.
1	31426	SEAL HOUSING	STAINLESS STEEL CF8M	1
2	28630	NAME PLATE	STAINLESS STEEL	1
3	21260	STUD 3/8-16X1.32	304 STAINLESS STEEL	10
4	28053	FLAT WASHER	304 STAINLESS STEEL	10
5	21268	HEXNUT 3/8-16	304 STAINLESS STEEL	10
6	31091	MOTOR ADAPTOR	CAST IRON	1
7	31235	CAPSCREW 1/2-13X3/4	304 STAINLESS STEEL	4
8	31312	CLAMP	STEEL	1
9	21255	PIPE PLUG 1/8" NPT	316 STAINLESS STEEL	2
10	31424	VOLUTE	STAINLESS STEEL CF8M	1
11	29194	HEX JAM NUT	316 STAINLESS STEEL	1
12	31955	IMPELLER	STAINLESS STEEL CF8M	1
13	31311	DRIVE SLEEVE	316 STAINLESS STEEL	1
14	31374	SEAL ASSEMBLY	CCS VITON	1
15	31430	O-RING	VITON	1

REV	DESCRIPTION	DRAWN	DATE	EN
G				
F				
E				
D				
C				
B				
A				

UNLESS OTHERWISE NOTED
THIRD ANGLE PROJECTION

2 PLACE DIM ± .020
3 PLACE DIM ± .010
ANGULAR DIM ± 1°

DO NOT SCALE

MP PUMPS, INC.
FRASER, MICHIGAN 48026, U.S.A.

MATERIAL: MATERIAL SPECS

DRAWN BY	DATE COMP.	APPROV.	SCALE	MADE FOR	MADE FROM
S.F.	2/10/17	D.D.			

NAME: CF7PPK SS:215TC 6.5 T-2100

DRAWING NO: 31962

NOTE: THIS DRAWING OR PRINT, PROPERTY OF MP PUMPS INC., CONTAINS PROPRIETARY AND CONFIDENTIAL INFORMATION. IT SHALL BE USED ONLY AS APPROVED BY MP PUMPS AND SHALL NOT BE GIVEN TO OTHERS OR COPIED WITHOUT THE WRITTEN CONSENT OF MP PUMPS. RETURN TO MP PUMPS PROMPTLY WHEN REQUESTED.