DRAWING NO
27170

www.PumpAgents.com

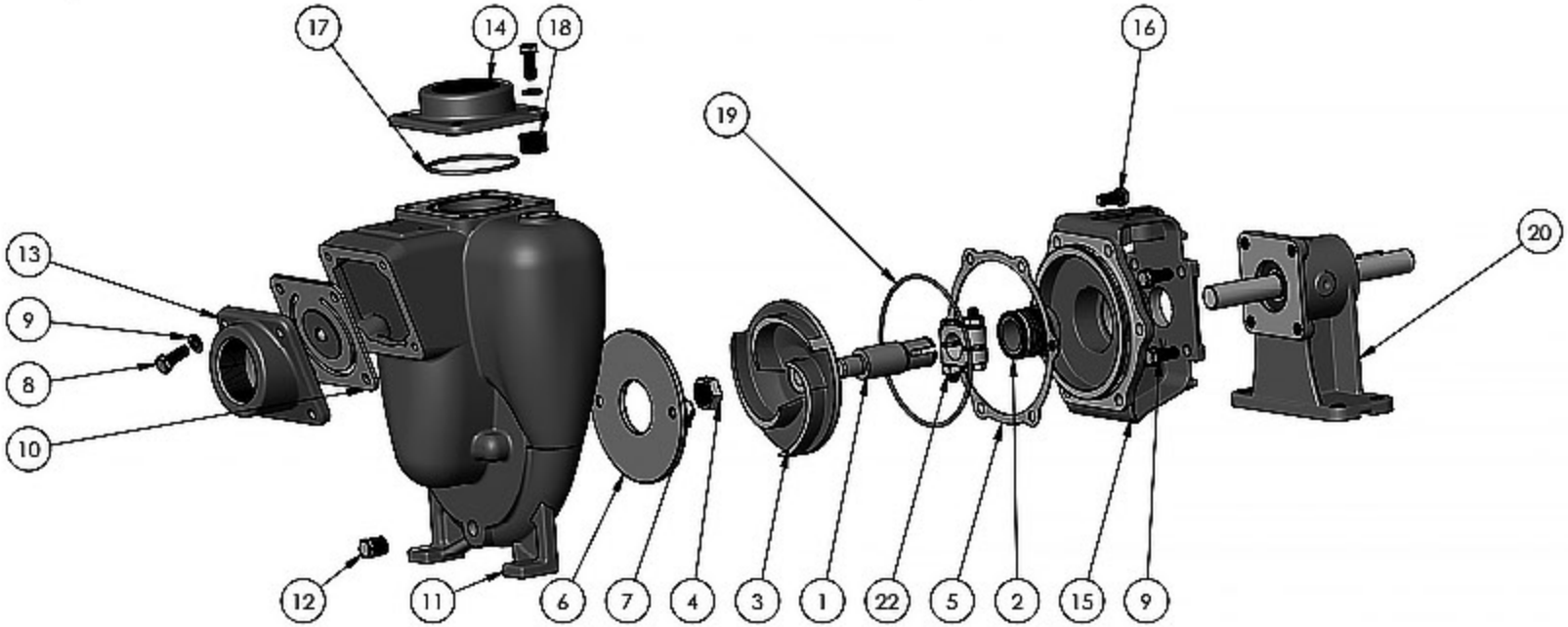

www.PumpAgents.com

ITEM NO.	PART NUMBER	DESCRIPTION	MATERIAL	SERVICE PARTS/QTY.
1	22286	DRIVE SLEEVE	303 STAINLESS STEEL	1
2	22273	SEAL ASSEMBLY 1" T-2100	CCS VITON	1
3	22293	IMPELLER	CAST IRON	1
4	22655	HEX JAM NUT 5/8-18	304 STAINLESS STEEL	1
5	22255	GASKET	LEXIDE NI-2085	1
6	22260	WEAR PLATE	STEEL	1
7	37137	SCREW FHS 5/16-18 X 5/8	304 STAINLESS STEEL	2
8	21242	CAP SCREW HH 5/16-18 X 7/8	304 STAINLESS STEEL	8
9	21238	LOCKWASHER 5/16 X 18	304 STAINLESS STEEL	12
10	23022	FLAPPER ASY	NITRILE/SS	1
11	22251	HOUSING	CAST IRON	1
12	41475	PIPE PLUG:1/4 NPT	STEEL	1
13	22387	SUCTION FLANGE	CAST IRON	1
14	22311	DISCHARGE FLANGE	CAST IRON	1
15	22247	ADAPTOR	CAST IRON	1
16	24965	CAPSCREW HH 5/16-18 X 3/4 PATCH	304 STAINLESS STEEL	6
17	39183	O-RING	BUNA	1
18	37140	PIPE PLUG 1/2"NPT	STEEL ZINC PLATED	1
19	36910	O-RING	BUNA	1
20	26289	PED ASSY	CAST IRON	1
21	21278	HEX BOLT 5/16-24 X.88	304 STAINLESS STEEL	4
22	23002	CLAMP ASSEMBLY	303 STAINLESS STEEL	1

SHEET 2

NOTE: THIS DRAWING OR PRINT, PROPERTY OF MP PUMPS INC., CONTAINS PROPIETARY AND CONFIDENTIAL INFORMATION. IT SHALL BE USED ONLY AS APPROVED BY MP PUMPS AND SHALL NOT BE GIVEN TO OTHERS OR COPIED WITHOUT THE WRITTEN CONSENT OF MP PUMPS. RETURN TO MP PUMPS PROMPTLY WHEN REQUESTED.

REV	DESCRIPTION	DRAWN	DATE	EN
G				
F				
E				
D				
C				
B				
A				

UNLESS OTHERWISE NOTED
THIRD ANGLE PROJECTION
2 PLACE DIM ± .020
3 PLACE DIM ± .010
ANGULAR DIM ± 1°

DO NOT SCALE

MP PUMPS, INC.

MATERIAL: CAST IRON ASTM A48 CLASS 25 OR ASTM A159 2500

DRAWN BY	DATE COMP.	APPROV.	SCALE	MADE FOR	MADE FROM
C.W.	10-22-15	DD	FULL		

NAME: FLOMAX 8 PED. ASY.

DRAWING NO: **27170**