Burks Pumps T37CT7M-AB
www.PumpAgents.com - Click here for Pricing/Ordering for Pumps and Parts



## *Close Coupled Regenerative Turbine*

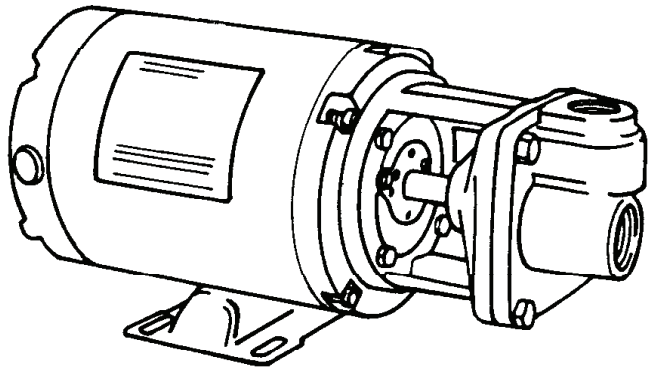

## 4CT - 1725 RPM - 60Hz.
## CT - 3450 RPM - 60Hz.

(See Indivdual curves for symbol number)

| *MAXIMUM HEAD | | | |
|---|---|---|---|
| Symbol Number | HP | Catalog Number | |
| | | 1 - Phase | 3 - Phase |
| 1 | 1/2 | 5CT7M | 35CT7M |
| 2 | 3/4 | 7CT7M | 37CT7M |
| 3 | 1/3 | 3CT6M | 33CT6M |
| 4 | 1/2 | 5CT6M | 35CT6M |
| 5 | 3/4 | 7CT6M | 37CT6M |
| 6 | 1/3 | 3CT5M | 33CT5M |
| 7 | 1/2 | 5CT5M | 35CT5M |
| 8 | 1/4 | 24CT7M | |
| 9 | 1/4 | 24CT6M | |
| 10 | 1/2 | 5CT8M | 35CT8M |
| 11 | 3/4 | 7CT8M | 37CT8M |

(*) For Standard Pumps with ODP motors

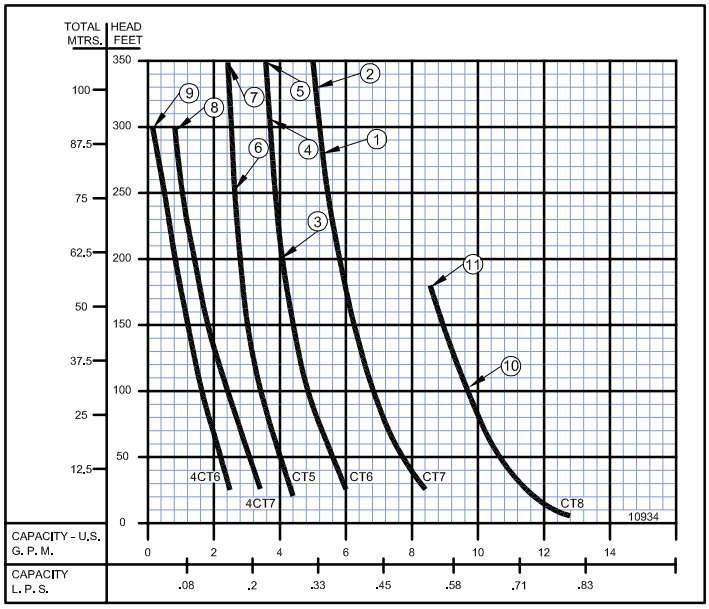


## CT - 2900 RPM - 50Hz.

(See Indivdual curves for symbol number)

| MAXIMUM HEAD | | | | |
|---|---|---|---|---|
| Symbol Number | HP | Catalog Number | Phase | Enclosure |
| 1 | .8 | L35CT7M | 3 | ODP |
| **2 | 1.0 | TL310CT7M | 3 | TEFC |
| 3 | 1.125 | L37CT7M | 3 | ODP |
| 5 | .58 | L33CT6M | 3 | ODP |
| 6 | .8 | L35CT6M | 3 | ODP |
| **7 | 1.0 | TL310CT6M | 3 | TEFC |
| 8 | 1.125 | L37CT6M | 3 | ODP |
| 9 | .58 | L33CT5M | 3 | ODP |
| 10 | .8 | L35CT5M | 3 | ODP |

(*) This pump is 115/230 Volt Single Phase Only.

(**) This pump is available only with TEFC motor for 50 Hz use.

All of the pumps above are available with stuffing box.

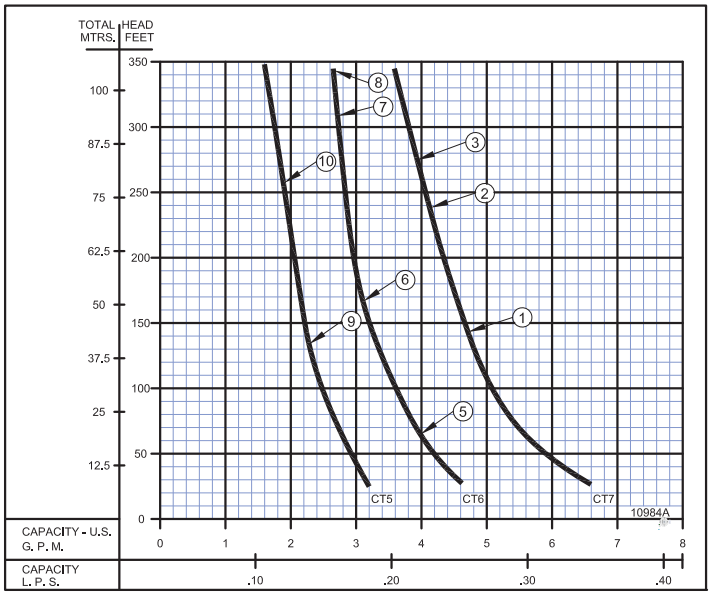

# Series: CT

60 Hz Performance

burks®
www.cranepumps.com

## *Close Coupled Regenerative Turbine*

**60 HZ - PERFORMANCE & SELECTION CHART**

| | Catalog Number | | HP | Tappings | | PSI Feet | TOTAL HEAD | | | | | | | | | | | | | |
|---|---|---|---|---|---|---|---|---|---|---|---|---|---|---|---|---|---|---|---|---|
| | | | | Suct. NPT | Disc. NPT | | 8.6<br>20 | 17.2<br>40 | 26<br>60 | 43.3<br>100 | 54.1<br>125 | 64.9<br>150 | 75.8<br>175 | 86.6<br>200 | 97.4<br>225 | 108.3<br>250 | 119.1<br>275 | 130<br>300 | 140.1<br>325 | 151.6<br>350 |
| | 1 Phase | 3 Phase | | | | | CAPACITY IN GPM | | | | | | | | | | | | | |
| 1750 RPM | 24CT6M | ---- | 1/4 | 1 | 1 | | 2.4 | 2.2 | 1.9 | 1.6 | 1.4 | 1.2 | 1.0 | 0.8 | 0.6 | 0.5 | 0.4 | 0.3 | | |
| 1750 RPM | 24CT7M | ---- | 1/4 | 1 | 1 | | 3.4 | 3.1 | 2.8 | 2.3 | 2.1 | 1.8 | 1.6 | 1.4 | 1.2 | 1.0 | 0.8 | 0.7 | | |
| 1750 RPM | 3CT5M | 33CT5M | 1/3 | 1 | 1 | | 4.2 | 4.0 | 3.8 | 3.4 | 3.2 | 3.0 | 2.9 | 2.8 | 2.7 | 2.6 | | | | |
| 1750 RPM | 5CT5M | 35CT5M | 1/2 | 1 | 1 | | 4.2 | 4.0 | 3.8 | 3.4 | 3.2 | 3.0 | 2.9 | 2.8 | 2.7 | 2.6 | 2.6 | 2.5 | 2.4 | 2.4* |
| 3450 RPM | 3CT6M | 33CT6M | 1/3 | 1 | 1 | | 6.0 | 5.7 | 5.3 | 4.8 | 4.6 | 4.4 | 4.3 | 4.2 | | | | | | |
| 3450 RPM | 5CT6M | 35CT6M | 1/2 | 1 | 1 | | 6.0 | 5.7 | 5.3 | 4.8 | 4.6 | 4.4 | 4.3 | 4.2 | 4.0 | 3.9 | 3.8 | 3.7 | | |
| 3450 RPM | 7CT6M | 37CT6M | 3/4 | 1 | 1 | | 6.0 | 5.7 | 5.3 | 4.8 | 4.6 | 4.4 | 4.3 | 4.2 | 4.0 | 3.9 | 3.8 | 3.7 | 3.7 | 3.6* |
| 3450 RPM | 5CT7M | 35CT7M | 1/2 | 1 | 1 | | 8.3 | 7.8 | 7.4 | 6.8 | 6.5 | 6.2 | 6.0 | 5.8 | 5.5 | | | | | |
| 3450 RPM | 7CT7M | 37CT7M | 3/4 | 1 | 1 | | 8.3 | 7.8 | 7.4 | 6.8 | 6.5 | 6.2 | 6.0 | 5.8 | 5.5 | 5.5 | 5.3 | 5.2 | 5.1 | 5.0* |
| 3450 RPM | 5CT8M | 35CT8M | 1/2 | 1 | 1 | | 11.7 | 11.0 | 10.5 | 9.7 | | | | | | | | | | |
| 3450 RPM | 7CT8M | 37CT8M | 3/4 | 1 | 1 | | 11.7 | 11.0 | 10.5 | 9.7 | 9.3 | 8.9 | 8.5 | | | | | | | |

* Rated to 358 ft (155 psi) per performance curve.

**60 HZ - PERFORMANCE & SELECTION CHART**

| | Catalog Number | | HP | Tappings | | kPa Meters | TOTAL HEAD | | | | | | | | | | | | | |
|---|---|---|---|---|---|---|---|---|---|---|---|---|---|---|---|---|---|---|---|---|
| | | | | Suct. NPT (in) | Disc. NPT (in) | | 59<br>6.1 | 119<br>12.1 | 179<br>18.2 | 299<br>30.5 | 373<br>38.1 | 447<br>45.7 | 523<br>53.3 | 597<br>61 | 672<br>68.6 | 747<br>76.2 | 821<br>83.8 | 896<br>91.4 | 966<br>99.1 | 1045<br>106.6 |
| | 1 Phase | 3 Phase | | | | | CAPACITY IN LPS | | | | | | | | | | | | | |
| 1750 RPM | 24CT6M | ---- | 1/4 | 1 | 1 | | 0.15 | 0.13 | 0.11 | 0.10 | 0.08 | 0.07 | 0.06 | 0.05 | 0.03 | 0.03 | 0.02 | 0.01 | | |
| 1750 RPM | 24CT7M | ---- | 1/4 | 1 | 1 | | 0.21 | 0.19 | 0.17 | 0.14 | 0.13 | 0.11 | 0.10 | 0.08 | 0.07 | 0.06 | 0.05 | 0.04 | | |
| 1750 RPM | 3CT5M | 33CT5M | 1/3 | 1 | 1 | | 0.26 | 0.25 | 0.23 | 0.21 | 0.20 | 0.18 | 0.18 | 0.17 | 0.17 | 0.16 | | | | |
| 1750 RPM | 5CT5M | 35CT5M | 1/2 | 1 | 1 | | 0.26 | 0.25 | 0.23 | 0.21 | 0.20 | 0.18 | 0.18 | 0.17 | 0.17 | 0.16 | 0.16 | 0.15 | 0.15 | 0.15 |
| 3450 RPM | 3CT6M | 33CT6M | 1/3 | 1 | 1 | | 0.37 | 0.35 | 0.33 | 0.30 | 0.29 | 0.27 | 0.27 | 0.26 | | | | | | |
| 3450 RPM | 5CT6M | 35CT6M | 1/2 | 1 | 1 | | 0.37 | 0.35 | 0.33 | 0.30 | 0.29 | 0.27 | 0.27 | 0.26 | 0.25 | 0.24 | 0.23 | 0.23 | | |
| 3450 RPM | 7CT6M | 37CT6M | 3/4 | 1 | 1 | | 0.37 | 0.35 | 0.33 | 0.30 | 0.29 | 0.27 | 0.27 | 0.26 | 0.25 | 0.24 | 0.23 | 0.23 | 0.23 | 0.22 |
| 3450 RPM | 5CT7M | 35CT7M | 1/2 | 1 | 1 | | 0.52 | 0.49 | 0.46 | 0.42 | 0.41 | 0.39 | 0.37 | 0.36 | 0.34 | | | | | |
| 3450 RPM | 7CT7M | 37CT7M | 3/4 | 1 | 1 | | 0.52 | 0.49 | 0.46 | 0.42 | 0.41 | 0.39 | 0.37 | 0.36 | 0.34 | 0.34 | 0.33 | 0.32 | 0.32 | 0.31 |
| 3450 RPM | 5CT8M | 35CT8M | 1/2 | 1 | 1 | | 0.73 | 0.69 | 0.66 | 0.61 | | | | | | | | | | |
| 3450 RPM | 7CT8M | 37CT8M | 3/4 | 1 | 1 | | 0.73 | 0.69 | 0.66 | 0.61 | 0.58 | 0.56 | 0.53 | | | | | | | |

**NOTE:** When pumping hot water over 180ºF (82.2ºC), check the NPSH available in the pumping system against the required pump NPSH shown on pump performance curves. Available NPSH must be greater than required NPSH.

Burks Pumps T37CT7M-AB
www.PumpAgents.com - Click here for Pricing/Ordering for Pumps and Parts



## *Close Coupled Regenerative Turbine*

| 50 HZ - PERFORMANCE & SELECTION CHART | | | | | | | | | | | | | | | | | | | |
|---|---|---|---|---|---|---|---|---|---|---|---|---|---|---|---|---|---|---|---|
| Catalog Number | | HP | Tappings | | PSI Feet | TOTAL HEAD | | | | | | | | | | | | | |
| | | | Suct. NPT | Disc. NPT | | 8.6<br>20 | 17.2<br>40 | 26<br>60 | 43.3<br>100 | 54.1<br>125 | 64.9<br>150 | 75.8<br>175 | 86.6<br>200 | 97.4<br>225 | 108.3<br>250 | 119.1<br>275 | 130<br>300 | 140.1<br>325 | 151.6<br>350 |
| 1 Phase | 3 Phase | | | | | CAPACITY IN GPM | | | | | | | | | | | | | |
| | L33CT5M | 0.58 | 1 | 1 | | 3.2 | 3.0 | 2.8 | 2.5 | 2.3 | | | | | | | | | |
| | L35CT5M | 0.8 | 1 | 1 | | 3.2 | 3.0 | 2.8 | 2.5 | 2.3 | 2.2 | 2.1 | 2.05 | 2.0 | 1.9 | 1.8 | 1.7 | 1.6 | 1.6* |
| | L33CT6M | 0.58 | 1 | 1 | | 4.8 | 4.4 | 4.0 | | | | | | | | | | | |
| | L35CT6M | 0.8 | 1 | 1 | | 4.8 | 4.4 | 4.0 | 3.6 | 3.4 | 3.2 | 3.1 | | | | | | | |
| | TL310CT6M | 1.0 | 1 | 1 | | 4.8 | 4.4 | 4.0 | 3.6 | 3.4 | 3.2 | 3.1 | 3.0 | 2.9 | 2.8 | 2.8 | 2.7 | | |
| | L37CT6M | 1.13 | | | | 4.8 | 4.4 | 4.0 | 3.6 | 3.4 | 3.2 | 3.1 | 3.0 | 2.9 | 2.8 | 2.8 | 2.7 | 2.7 | |
| | L35CT7M | 0.8 | 1 | 1 | | 6.6 | 6.2 | 5.6 | 5.1 | 4.6 | 4.7 | | | | | | | | |
| | TL310CT7M | 1.0 | 1 | 1 | | 6.6 | 6.2 | 5.6 | 5.1 | 4.6 | 4.7 | 4.5 | 4.4 | 4.2 | | | | | |
| | L37CT7M | 1.13 | | | | 6.6 | 6.2 | 5.6 | 5.1 | 4.6 | 4.7 | 4.5 | 4.4 | 4.2 | 4.1 | 3.9 | | | |
| L10CT7M | ---- | 1.3 | 1 | 1 | | 6.6 | 6.2 | 5.6 | 5.1 | 4.8 | 4.7 | 4.5 | 4.4 | 4.2 | 4.1 | 3.9 | 3.8 | 3.7 | |

2900 RPM

* Rated to 358 ft (155 psi) per performance curve.

| 50 HZ - PERFORMANCE & SELECTION CHART | | | | | | | | | | | | | | | | | | | |
|---|---|---|---|---|---|---|---|---|---|---|---|---|---|---|---|---|---|---|---|
| Catalog Number | | HP | Tappings | | kPa Meters | TOTAL HEAD | | | | | | | | | | | | | |
| | | | Suct. NPT (in) | Disc. NPT (in) | | 59<br>6.1 | 119<br>12.1 | 179<br>18.2 | 299<br>30.5 | 373<br>38.1 | 447<br>45.7 | 523<br>53.3 | 597<br>61 | 672<br>68.6 | 747<br>76.2 | 821<br>83.8 | 896<br>91.4 | 966<br>99.1 | 1045<br>106.6 |
| 1 Phase | 3 Phase | | | | | CAPACITY IN LPS | | | | | | | | | | | | | |
| | L33CT5M | 0.58 | 1 | 1 | | 0.20 | 0.18 | 0.17 | 0.15 | 0.14 | | | | | | | | | 0.10 |
| | L35CT5M | 0.8 | 1 | 1 | | 0.20 | 0.18 | 0.17 | 0.15 | 0.14 | 0.13 | 0.13 | 0.12 | 0.12 | 0.11 | 0.11 | 0.10 | 0.10 | |
| | L33CT6M | 0.58 | 1 | 1 | | 0.30 | 0.27 | 0.25 | | | | | | | | | | | |
| | L35CT6M | 0.8 | 1 | 1 | | 0.30 | 0.27 | 0.25 | 0.22 | 0.21 | 0.20 | 0.19 | | | | | | | |
| | TL310CT6M | 1.0 | 1 | 1 | | 0.30 | 0.27 | 0.25 | 0.22 | 0.21 | 0.20 | 0.19 | 0.18 | 0.18 | 0.17 | 0.17 | 0.17 | | |
| | L37CT6M | 1.13 | | | | 0.30 | 0.27 | 0.25 | 0.22 | 0.21 | 0.20 | 0.19 | 0.18 | 0.18 | 0.17 | 0.17 | 0.17 | 0.17 | |
| | L35CT7M | 0.8 | 1 | 1 | | 0.41 | 0.39 | 0.35 | 0.32 | 0.29 | 0.29 | | | | | | | | |
| | TL310CT7M | 1.0 | 1 | 1 | | 0.41 | 0.39 | 0.35 | 0.32 | 0.29 | 0.29 | 0.28 | 0.27 | 0.26 | | | | | |
| | L37CT7M | 1.13 | | | | 0.41 | 0.39 | 0.35 | 0.32 | 0.29 | 0.29 | 0.28 | 0.27 | 0.26 | 0.25 | 0.24 | | | |
| L10CT7M | ---- | 1.3 | 1 | 1 | | 0.41 | 0.39 | 0.35 | 0.32 | 0.30 | 0.29 | 0.28 | 0.27 | 0.26 | 0.25 | 0.24 | 0.23 | 0.23 | |

2900 RPM

**NOTE:** When pumping hot water over 180ºF (82.2ºC), check the NPSH available in the pumping system against the required pump NPSH shown on pump performance curves. Available NPSH must be greater than required NPSH.

PumpAgents.com
Wholesale Pump Agents

## *Close Coupled Regenerative Turbine*

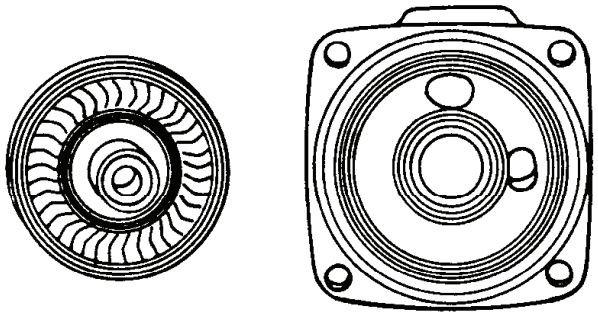

BURKS close coupled turbine pumps, Series CT, 3450 (60Hz) and 2900 (50Hz) R.P.M. and 4CT, 1725 R.P.M. are available for capacities up to 8 g.p.m. (0.50 L.P.S.) - pressures up to 150 p.s.i. (1034 kpa) and temperatures up to 225°F (107°C), come with standard mechanical shaft seal. Special shaft seals are available for higher temperatures and fluids other than water.

These compact turbine pumps are designed for pumping clear water and many other non-abrasive, lower viscosity liquids. They are especially engineered for boiler feed on steam process applications and will serve up to a 38 hp. boiler at a 3 to 1 safety factor. Available in bronze fitted as standard. All bronze or stainless steel construction also available. These pumps are recommended for many application requiring higher pressures and lower capacities.

BURKS is the only turbine pump with Life-Lok ® External Impeller Adjustment feature that allows readjustment of impeller without disturbing piping, disassembling pump or replacing parts. Gives up to 40% longer service life than turbine pumps of other designs.

| MAXIMUM OPERATING CONDITIONS | |
|---|---|
| TEMPERATURE (For Standard Buna-N Seal) | 225ºF (107ºC) |
| INLET PRESSURE | 100 PSI (689kPa) |
| CASING WORKING PRESSURE | 250 PSI (1723kPa) |
| VISCOSITY | 200 SSU |

**MOTOR INFORMATION**

Standard pump motors have open drip proof construction and are rated with jet pump service factors for continuous duty operation at all ratings shown. Single phase motors are 115/230 volt, 60 Hz, capacitor start/induction run with buit-in overload protection. Single phase motors 1/3, 1/2 & 3/4 HP are U.L. recognized.Three phase motors require a magnetic type starter which provides full 3-leg overload protection. Failure to use the correct starter and overloads will void the warranty.All three phase motors are 208-230/460 volt, 60/50Hz, 3450/2900 RPM.

**FOR TEMPERATURES TO 500°F (260°C).**

Series CT Pumps are available in a Jacketed Seal Cavity design for pumping hot oil, hot water and heat transfer fluids in common use in high temperature heating or cooling applications. This feature greatly extends seal life in high temperature applications. To order, add suffix “J” to pump catalog number for temperatures below 400°F (204°C) and add suffix “JK” to pump catalog number for temperatures over 400°F (204°). Example: 5CT5MJ. See Section on High Temperature Pumps for more information.

| MATERIALS OF CONSTRUCTION | | | |
|---|---|---|---|
| **PART** | **BRONZE FITTED** | **ALL BRONZE** | **STAINLESS STEEL** |
| Frame | Cast Iron | Bronze | #316 Stainless |
| Impeller | Bronze (Monel Blades) | Bronze (Monel Blades) | #303 Stainless |
| Raceway | Bronze | Bronze | #303 Stainless |
| Shaft | #316 Stainless | #316 Stainless | #316 Stainless |
| Shaft Seal | Carbon-Ceramic SS - Buna-N | Carbon-Ceramic SS - Buna-N | Carbon-Ceramic SS - Buna-N |

**WARNING:**
CANCER AND REPRODUCTIVE HARM -
WWW.P65WARNINGS.CA.GOV

Burks Pumps T37CT7M-AB
www.PumpAgents.com - Click here for Pricing/Ordering for Pumps and Parts



## *Close Coupled Regenerative Turbine*

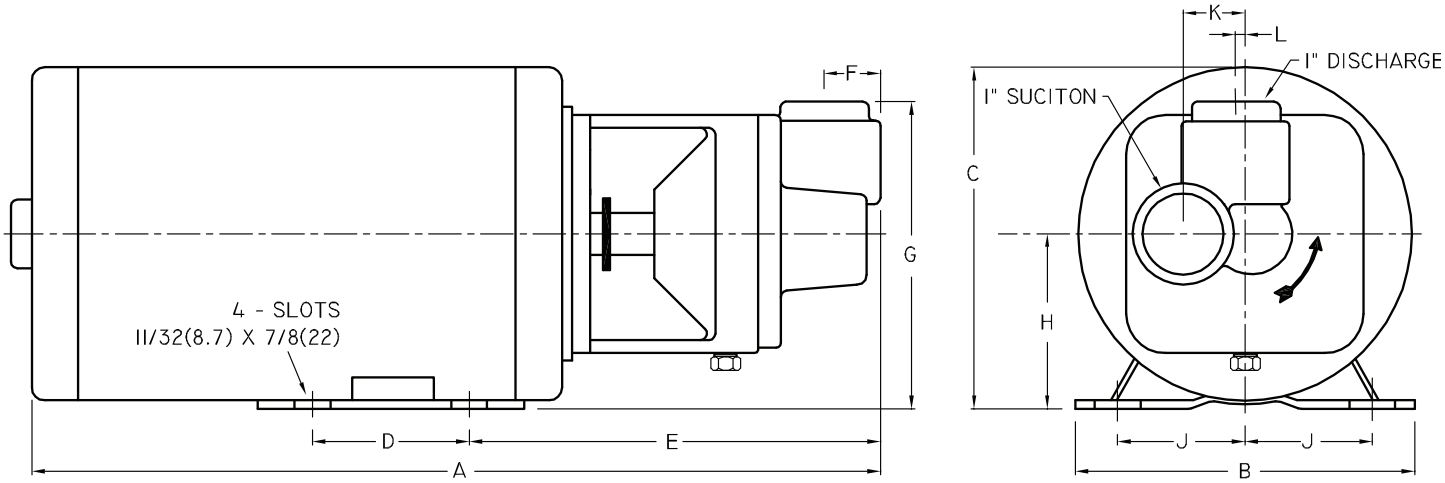


| DIMENSIONS IN INCHES (mm) | | | | | | | | | | | | | | | | | | |
|---|---|---|---|---|---|---|---|---|---|---|---|---|---|---|---|---|---|---|
| Series | HP | Tappings | | 1 PH A | 1 PH A (S.S.) | 3 PH A | 3 PH A (S.S.) | B | C | D | E | E (S.S.) | F | F (S.S.) | G | H | J | K | L |
| | | Disc. NPT | Suct. NPT | | | | | | | | | | | | | | | | |
| 4CT | 1/4 | 1 | 1 | 16¼ (413) | 16.675 (424) | ---- | ---- | 6½ (165) | 6⅝ (168) | 3 (76) | 7⅞ (200) | 8 5/16 (211) | 1 (25) | 1 (25) | 5⅞ (149) | 3½ (89) | 2 7/16 (62) | 1 5/32 (29) | 3/16 (4.8) |
| CT | 1/3 | 1 | 1 | 16¼ (413) | 16.675 (424) | 16¼ (413) | 16.675 (424) | 6½ (165) | 6⅝ (168) | 3 (76) | 7⅞ (200) | 8 5/16 (211) | 1 (25) | 1 (25) | 5⅞ (149) | 3½ (89) | 2 7/16 (62) | 1 5/32 (29) | 3/16 (4.8) |
| | 1/2 | 1 | 1 | | | | | | | | | | | | | | | | |
| | 3/4 | 1 | 1 | | | | | | | | | | | | | | | | |

Dimensions shown above are approximate maximum dimensions for standard pumps equipped with open drip-proof motors.

PumpAgents.com
Wholesale Pump Agents

***A strainer, approximately 20 mesh, should be installed on the suction side of the pump to prevent chips, scale or hard foreign particales from entering the pump and damaging the raceway and impeller.***

# Series: CT

60 Hz Performance

burks®
www.cranepumps.com

## *Close Coupled Regenerative Turbine*

1725 RPM

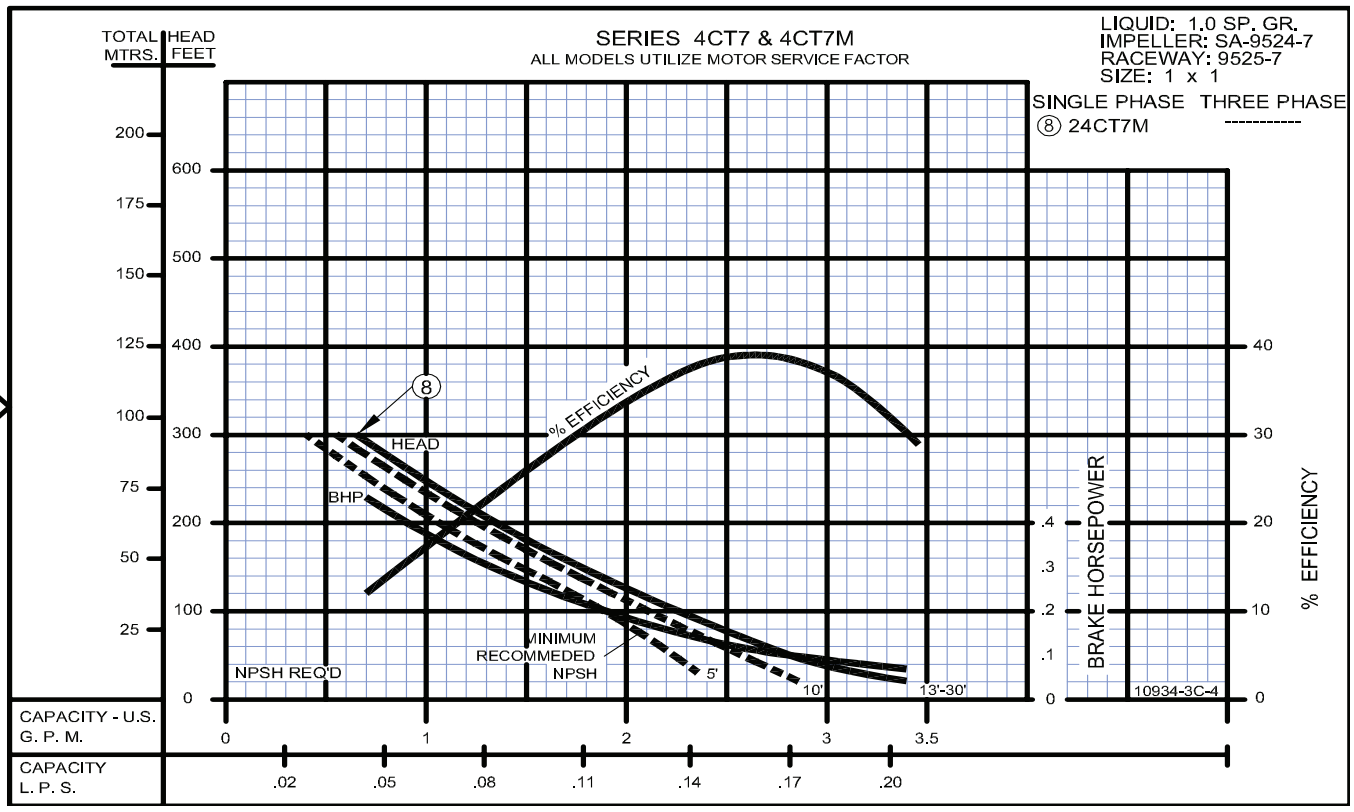


3450 RPM

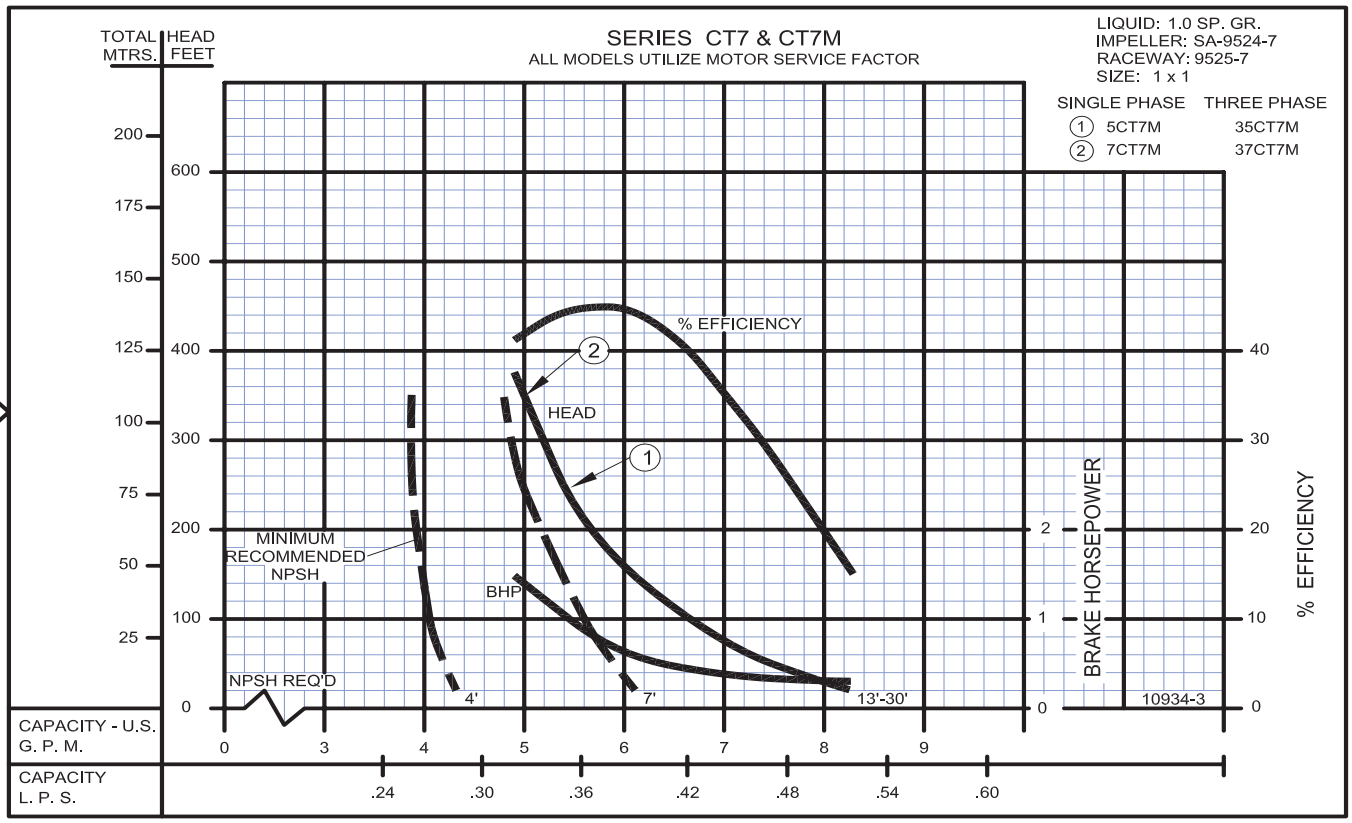




CRANE®
A Crane Co. Company

PUMPS & SYSTEMS

PumpAgents.com
Wholesale Pump Agents

USA: (937) 778-8947 • Canada: (905) 457-6223 • International: (937) 615-3598

Burks Pumps T37CT7M-AB
www.PumpAgents.com - Click here for Pricing/Ordering for Pumps and Parts



## *Close Coupled Regenerative Turbine*

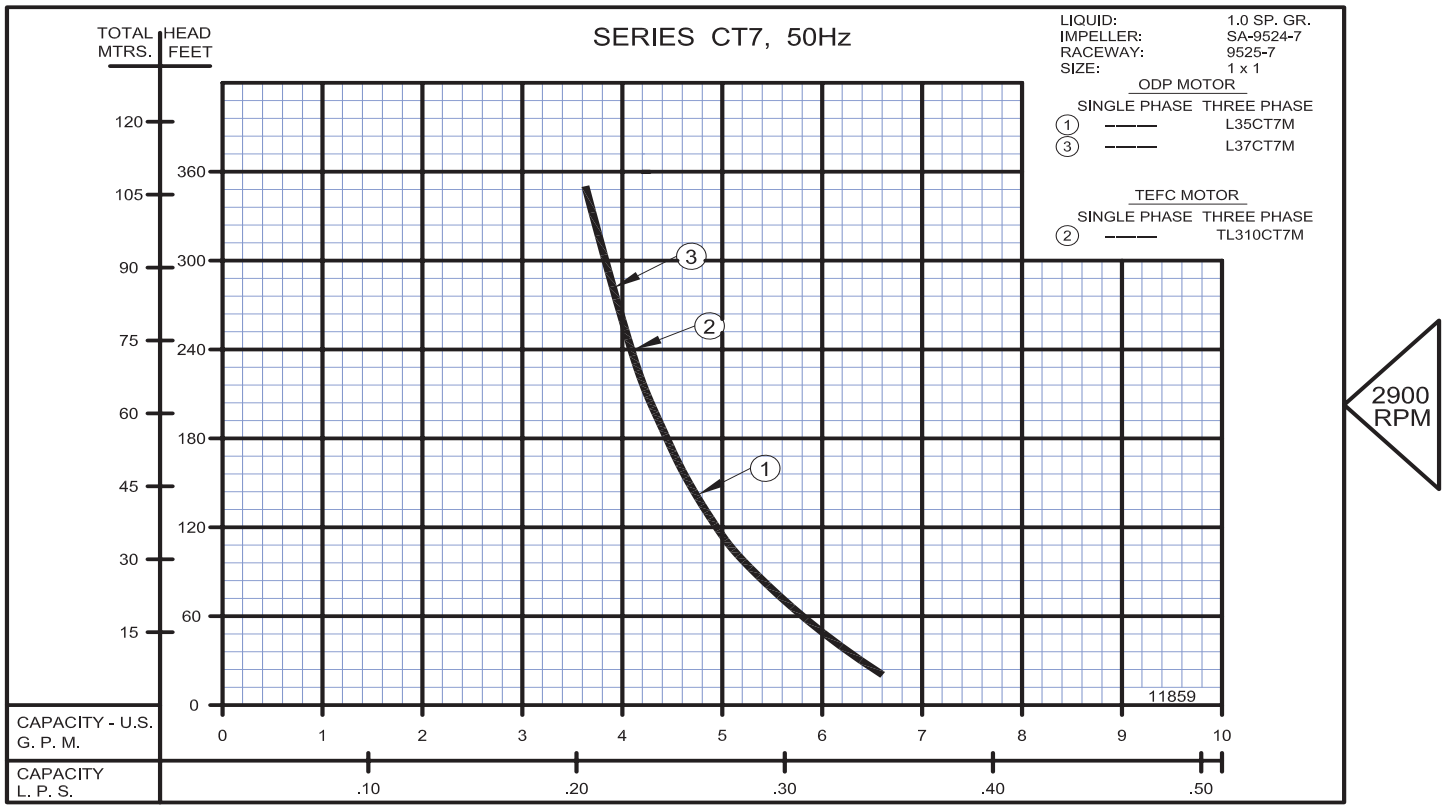


PumpAgents.com
Wholesale Pump Agents

## *Turbines - Close Coupled*

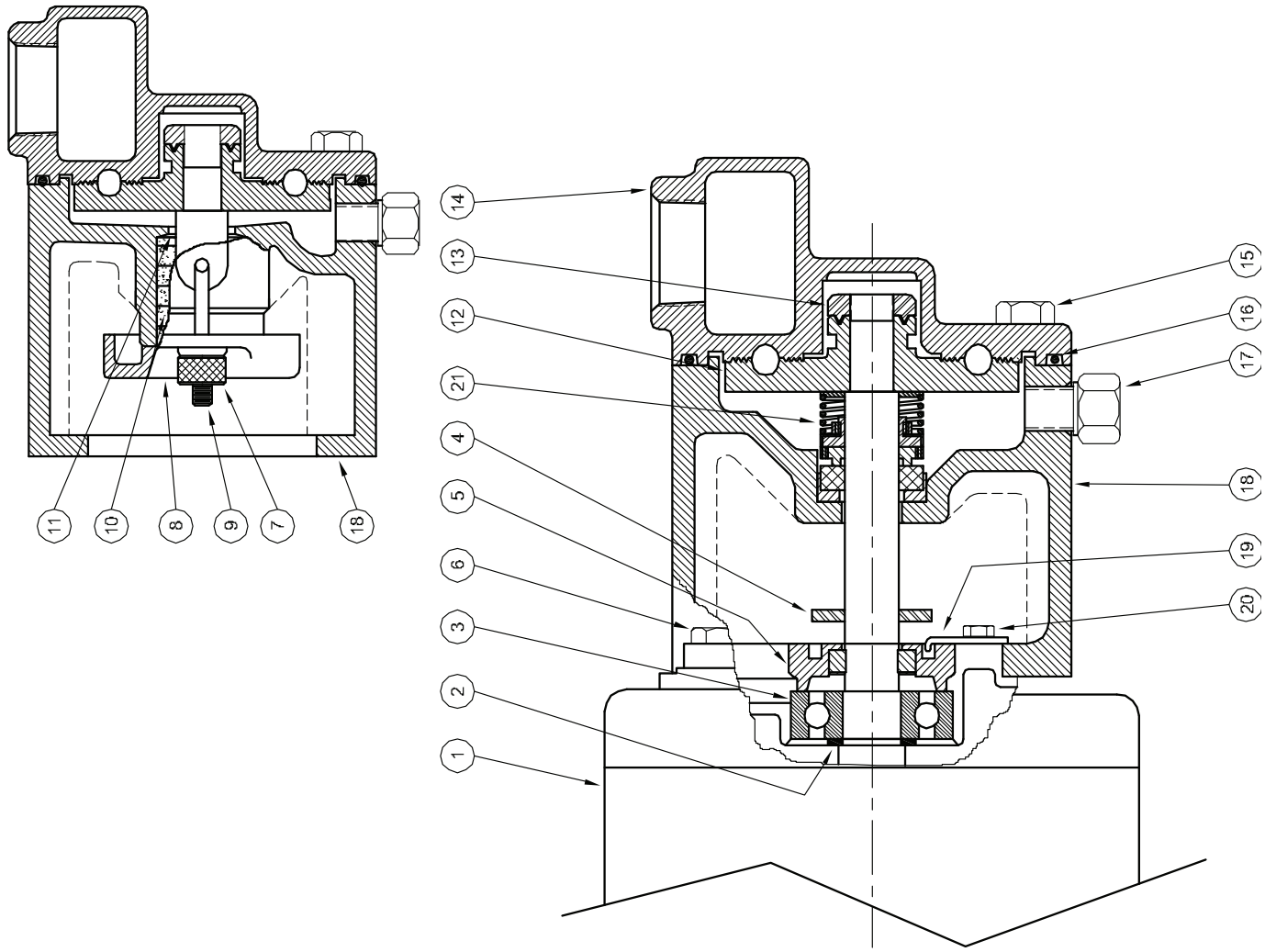


| 1 - MOTORS | | |
|---|---|---|
| RPM & PHASE | PART NUMBER | HP |
| **1725RPM - OPEN DRIP PROOF - 1 PHASE** | | |
| 1725 RPM Single Phase (ODP) | 09755 | 1/4 |
| **3450RPM - OPEN DRIP PROOF - 1 PHASE** | | |
| 3450 RPM Single Phase (ODP) | 09896<br>09897<br>09898 | 1/3<br>1/2<br>3/4 |
| **3450/2900 RPM - OPEN DRIP PROOF 3 PHASE** | | |
| 3450/2900 RPM Three Phase (ODP) | 09704<br>09637<br>09622 | 1/3<br>1/2<br>3/4 |
| **3450/2900 RPM - TOTALLY ENCLOSED** | | |
| 3450/2900 RPM Single Phase (TEFC) | 09793 | 3/4 |
| 3450/2900 RPM Three Phase (TEFC) | 09794<br>20472 (60/50) | 3/4<br>1 |
| **2900 RPM - 50 Hz OPEN DRIP PROOF & TOTALLY ENCLOSED** | | |
| 2900 RPM Single Phase (ODP) | 09896-50<br>09897-50<br>09898-50<br>20142 | 1/3<br>1/2<br>3/4<br>1 |
| 2900 RPM Three Phase (TEFC) - 60/50 | 20472 | 1 |

| SYMBOL NUMBER | PART NUMBER | QTY | DESCRIPTION |
|---|---|---|---|
| 2 | 02726 | 1 | Washer - Bearing Back Up |
| 3 | 09164 | 1 | Ball Bearing - Pump End |
| | 08935 | 1 | Ball Bearing - Switch End (Not Shown) |
| 4 | 08105 | 1 | Slinger |
| 5 | 01332-B | 1 | Screw, Impeller Adjusting |
| 6 | 03121 | 4 | Screw, 1/4-20 x 3/4 |
| 7 | 04211 | 2 | Gland Nut |
| 8 | 05804-A | 1 | Gland, Stuffing Box |
| 9 | 07003 | 2 | Gland Bolt |
| 10 | 08091 | 5 | Packing |
| 11 | 08085 | 1 | Washer - Stuffing Box |
| * 12 | SA09524-5 | 1 | Impeller - 5/16 CT5M |
| | SA09524-6 | 1 | Impeller - 3/8 CT6M |
| | SA09524-7 | 1 | Impeller - 7/16 CT7M |
| | SA09524-8 | 1 | Impeller - 1/2 CT8M |
| 13 | 02258 | 1 | Nut, Impeller Lock |
| 14 | 09525-5 | 1 | Raceway - 5/16 CT5M |
| | 09525-6 | 1 | Raceway - 3/8 CT6M |
| | 09525-7 | 1 | Raceway - 7/16 CT7M |
| | 09525-8 | 1 | Raceway - 1/2 CT8M |
| 15 | 01928 | 4 | Screw, 3/8-16 x 1" Lg |
| 16 | 09530 | 1 | O-Ring Gasket - Buna-N |
| | 09699 | 1 | O-Ring Gasket - Viton |
| | 22134 | 1 | O-Ring Gasket - EPT |
| | 09530-T | 1 | O-Ring Gasket - Teflon |
| 17 | 04236 | 1 | Plug, 1/4-18 NPT |
| 18 | 09522 | 1 | Frame (for packing gland) |
| | 09521 | 1 | Frame (for mechanical seal) |
| 19 | 07576 | 1 | Adjusting Screw Lock |
| 20 | 07577 | 1 | Screw, #10 x 3/4" Lg |
| 21 | 08514 | 1 | Mechanical Seal - Buna-N |
| | 09762 | 1 | Mechanical Seal - Viton |
| | 20764-C | 1 | Mechanical Seal - EPT |
| **DIFFERING PARTS FOR ALL BRONZE CONSTRUCTION** | | | |
| 6 | 03121-B | 4 | Screw, 1/4-20 x 3/4" Lg |
| 15 | 03289 | 4 | Screw, 3/8-16 x 1" Lg |
| 18 | 09522-A | 1 | Frame (for packing gland) |
| | 09521-A | 1 | Frame (for mechanical seal) |

(*) Standard impellers are suitable for fluid temperatures to 250°F (121°C). For higher temperatures, add the designation "HT" to impeller part number. This includes all "MJ" Jacketed Seal Pumps. EXAMPLE: SA09524-HT-5

**NOTE 1:** Impeller and raceway must be ordered as a repair kit. NOT available individually.

**REPAIR KITS FOR CT SERIES PUMPS**

| REPAIR KIT P/N (STD Buna-N) | MODEL | REPAIR KIT P/N (Viton) | MODEL | REPAIR KIT P/N (EPT) | MODEL | REPAIR KIT P/N (High Temp) | MODEL |
|---|---|---|---|---|---|---|---|
| 20158-5 | CT5M | 20158-5-MV | CT5MV | 20158-5-ME | CT5ME | 20158-HT-5 | CT5MV-HT |
| 20158-6 | CT6M | 20158-6-MV | CT6MV | 20158-6-ME | CT6ME | 20158-HT-6 | CT6MV-HT |
| 20158-7 | CT7M | 20158-7-MV | CT7MV | 20158-7-ME | CT7ME | 20158-HT-7 | CT7MV-HT |
| 20158-8 | CT8M | 20158-8-MV | CT8MV | 20158-8-ME | CT8ME | | |

**KIT INCLUDES:** Impeller, Raceway, Shaft Seal, O-Ring Gasket, Impeller Locknut and Instructions.

**WARNING:**
CANCER AND REPRODUCTIVE HARM -
WWW.P65WARNINGS.CA.GOV



CRANE
A Crane Co. Company
PUMPS & SYSTEMS
USA: (937) 778-8947 • Canada: (905) 457-6223 • International: (937) 615-3598

www.PumpAgents.com
PumpAgents.com Wholesale Pump Agents