Burks Pumps T37CT6M
www.PumpAgents.com - Click here for Pricing/Ordering for Pumps and Parts

Close Coupled Regenerative Turbine

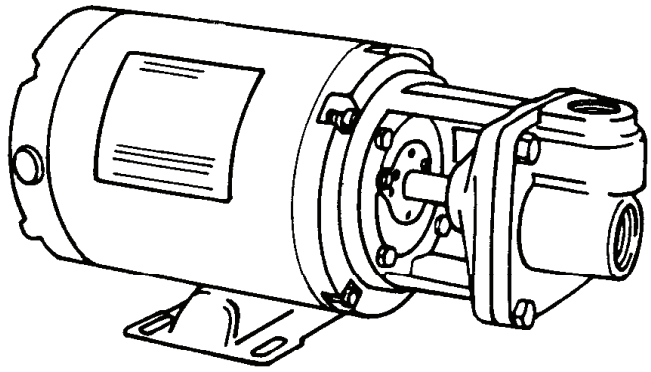

4CT - 1725 RPM - 60Hz.
CT - 3450 RPM - 60Hz.

(See Indivdual curves for symbol number)

*MAXIMUM HEAD			
Symbol Number	HP	Catalog Number	
		1 - Phase	3 - Phase
1	1/2	5CT7M	35CT7M
2	3/4	7CT7M	37CT7M
3	1/3	3CT6M	33CT6M
4	1/2	5CT6M	35CT6M
5	3/4	7CT6M	37CT6M
6	1/3	3CT5M	33CT5M
7	1/2	5CT5M	35CT5M
8	1/4	24CT7M	
9	1/4	24CT6M	
10	1/2	5CT8M	35CT8M
11	3/4	7CT8M	37CT8M

(*) For Standard Pumps with ODP motors

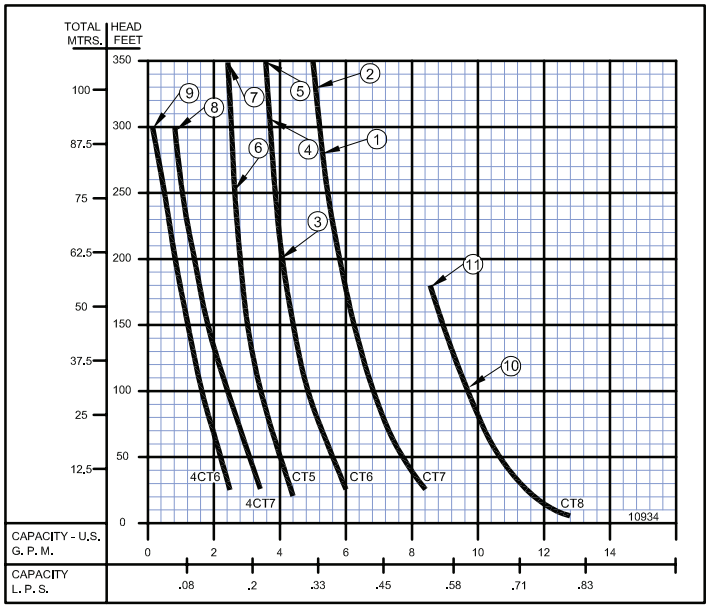

CT - 2900 RPM - 50Hz.

(See Indivdual curves for symbol number)

MAXIMUM HEAD				
Symbol Number	HP	Catalog Number	Phase	Enclosure
1	.8	L35CT7M	3	ODP
**2	1.0	TL310CT7M	3	TEFC
3	1.125	L37CT7M	3	ODP
5	.58	L33CT6M	3	ODP
6	.8	L35CT6M	3	ODP
**7	1.0	TL310CT6M	3	TEFC
8	1.125	L37CT6M	3	ODP
9	.58	L33CT5M	3	ODP
10	.8	L35CT5M	3	ODP

(*) This pump is 115/230 Volt Single Phase Only.

(**) This pump is available only with TEFC motor for 50 Hz use.

All of the pumps above are available with stuffing box.

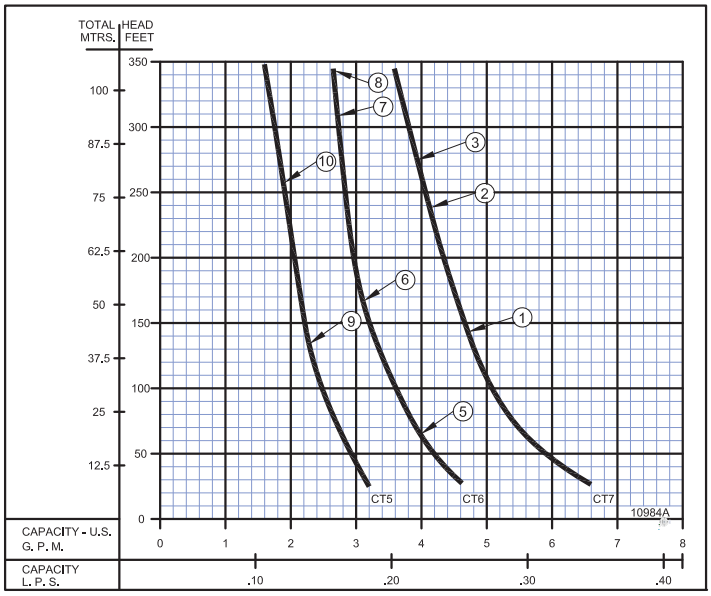

Series: CT

60 Hz Performance

burks®
www.cranepumps.com

Close Coupled Regenerative Turbine

60 HZ - PERFORMANCE & SELECTION CHART

	Catalog Number		HP	Tappings		PSI Feet	TOTAL HEAD													
				Suct. NPT	Disc. NPT		8.6 20	17.2 40	26 60	43.3 100	54.1 125	64.9 150	75.8 175	86.6 200	97.4 225	108.3 250	119.1 275	130 300	140.1 325	151.6 350
	1 Phase	3 Phase					CAPACITY IN GPM													
1750 RPM	24CT6M	----	1/4	1	1		2.4	2.2	1.9	1.6	1.4	1.2	1.0	0.8	0.6	0.5	0.4	0.3		
1750 RPM	24CT7M	----	1/4	1	1		3.4	3.1	2.8	2.3	2.1	1.8	1.6	1.4	1.2	1.0	0.8	0.7		
1750 RPM	3CT5M	33CT5M	1/3	1	1		4.2	4.0	3.8	3.4	3.2	3.0	2.9	2.8	2.7	2.6				
1750 RPM	5CT5M	35CT5M	1/2	1	1		4.2	4.0	3.8	3.4	3.2	3.0	2.9	2.8	2.7	2.6	2.6	2.5	2.4	2.4*
3450 RPM	3CT6M	33CT6M	1/3	1	1		6.0	5.7	5.3	4.8	4.6	4.4	4.3	4.2						
3450 RPM	5CT6M	35CT6M	1/2	1	1		6.0	5.7	5.3	4.8	4.6	4.4	4.3	4.2	4.0	3.9	3.8	3.7		
3450 RPM	7CT6M	37CT6M	3/4	1	1		6.0	5.7	5.3	4.8	4.6	4.4	4.3	4.2	4.0	3.9	3.8	3.7	3.7	3.6*
3450 RPM	5CT7M	35CT7M	1/2	1	1		8.3	7.8	7.4	6.8	6.5	6.2	6.0	5.8	5.5					
3450 RPM	7CT7M	37CT7M	3/4	1	1		8.3	7.8	7.4	6.8	6.5	6.2	6.0	5.8	5.5	5.5	5.3	5.2	5.1	5.0*
3450 RPM	5CT8M	35CT8M	1/2	1	1		11.7	11.0	10.5	9.7										
3450 RPM	7CT8M	37CT8M	3/4	1	1		11.7	11.0	10.5	9.7	9.3	8.9	8.5							

* Rated to 358 ft (155 psi) per performance curve.

60 HZ - PERFORMANCE & SELECTION CHART

	Catalog Number		HP	Tappings		kPa Meters	TOTAL HEAD													
				Suct. NPT (in)	Disc. NPT (in)		59 6.1	119 12.1	179 18.2	299 30.5	373 38.1	447 45.7	523 53.3	597 61	672 68.6	747 76.2	821 83.8	896 91.4	966 99.1	1045 106.6
	1 Phase	3 Phase					CAPACITY IN LPS													
1750 RPM	24CT6M	----	1/4	1	1		0.15	0.13	0.11	0.10	0.08	0.07	0.06	0.05	0.03	0.03	0.02	0.01		
1750 RPM	24CT7M	----	1/4	1	1		0.21	0.19	0.17	0.14	0.13	0.11	0.10	0.08	0.07	0.06	0.05	0.04		
1750 RPM	3CT5M	33CT5M	1/3	1	1		0.26	0.25	0.23	0.21	0.20	0.18	0.18	0.17	0.17	0.16				
1750 RPM	5CT5M	35CT5M	1/2	1	1		0.26	0.25	0.23	0.21	0.20	0.18	0.18	0.17	0.17	0.16	0.16	0.15	0.15	0.15
3450 RPM	3CT6M	33CT6M	1/3	1	1		0.37	0.35	0.33	0.30	0.29	0.27	0.27	0.26						
3450 RPM	5CT6M	35CT6M	1/2	1	1		0.37	0.35	0.33	0.30	0.29	0.27	0.27	0.26	0.25	0.24	0.23	0.23		
3450 RPM	7CT6M	37CT6M	3/4	1	1		0.37	0.35	0.33	0.30	0.29	0.27	0.27	0.26	0.25	0.24	0.23	0.23	0.23	0.22
3450 RPM	5CT7M	35CT7M	1/2	1	1		0.52	0.49	0.46	0.42	0.41	0.39	0.37	0.36	0.34					
3450 RPM	7CT7M	37CT7M	3/4	1	1		0.52	0.49	0.46	0.42	0.41	0.39	0.37	0.36	0.34	0.34	0.33	0.32	0.32	0.31
3450 RPM	5CT8M	35CT8M	1/2	1	1		0.73	0.69	0.66	0.61										
3450 RPM	7CT8M	37CT8M	3/4	1	1		0.73	0.69	0.66	0.61	0.58	0.56	0.53							

NOTE: When pumping hot water over 180ºF (82.2ºC), check the NPSH available in the pumping system against the required pump NPSH shown on pump performance curves. Available NPSH must be greater than required NPSH.

Burks Pumps T37CT6M
www.PumpAgents.com - Click here for Pricing/Ordering for Pumps and Parts

Close Coupled Regenerative Turbine

50 HZ - PERFORMANCE & SELECTION CHART																			
Catalog Number		HP	Tappings		PSI Feet	TOTAL HEAD													
			Suct. NPT	Disc. NPT		8.6 20	17.2 40	26 60	43.3 100	54.1 125	64.9 150	75.8 175	86.6 200	97.4 225	108.3 250	119.1 275	130 300	140.1 325	151.6 350
1 Phase	3 Phase					CAPACITY IN GPM													
	L33CT5M	0.58	1	1		3.2	3.0	2.8	2.5	2.3									
	L35CT5M	0.8	1	1		3.2	3.0	2.8	2.5	2.3	2.2	2.1	2.05	2.0	1.9	1.8	1.7	1.6	1.6*
	L33CT6M	0.58	1	1		4.8	4.4	4.0											
	L35CT6M	0.8	1	1		4.8	4.4	4.0	3.6	3.4	3.2	3.1							
	TL310CT6M	1.0	1	1		4.8	4.4	4.0	3.6	3.4	3.2	3.1	3.0	2.9	2.8	2.8	2.7		
	L37CT6M	1.13				4.8	4.4	4.0	3.6	3.4	3.2	3.1	3.0	2.9	2.8	2.8	2.7	2.7	
	L35CT7M	0.8	1	1		6.6	6.2	5.6	5.1	4.6	4.7								
	TL310CT7M	1.0	1	1		6.6	6.2	5.6	5.1	4.6	4.7	4.5	4.4	4.2					
	L37CT7M	1.13				6.6	6.2	5.6	5.1	4.6	4.7	4.5	4.4	4.2	4.1	3.9			
L10CT7M	----	1.3	1	1		6.6	6.2	5.6	5.1	4.8	4.7	4.5	4.4	4.2	4.1	3.9	3.8	3.7	

2900 RPM

* Rated to 358 ft (155 psi) per performance curve.

50 HZ - PERFORMANCE & SELECTION CHART																			
Catalog Number		HP	Tappings		kPa Meters	TOTAL HEAD													
			Suct. NPT (in)	Disc. NPT (in)		59 6.1	119 12.1	179 18.2	299 30.5	373 38.1	447 45.7	523 53.3	597 61	672 68.6	747 76.2	821 83.8	896 91.4	966 99.1	1045 106.6
1 Phase	3 Phase					CAPACITY IN LPS													
	L33CT5M	0.58	1	1		0.20	0.18	0.17	0.15	0.14									0.10
	L35CT5M	0.8	1	1		0.20	0.18	0.17	0.15	0.14	0.13	0.13	0.12	0.12	0.11	0.11	0.10	0.10	
	L33CT6M	0.58	1	1		0.30	0.27	0.25											
	L35CT6M	0.8	1	1		0.30	0.27	0.25	0.22	0.21	0.20	0.19							
	TL310CT6M	1.0	1	1		0.30	0.27	0.25	0.22	0.21	0.20	0.19	0.18	0.18	0.17	0.17	0.17		
	L37CT6M	1.13				0.30	0.27	0.25	0.22	0.21	0.20	0.19	0.18	0.18	0.17	0.17	0.17	0.17	
	L35CT7M	0.8	1	1		0.41	0.39	0.35	0.32	0.29	0.29								
	TL310CT7M	1.0	1	1		0.41	0.39	0.35	0.32	0.29	0.29	0.28	0.27	0.26					
	L37CT7M	1.13				0.41	0.39	0.35	0.32	0.29	0.29	0.28	0.27	0.26	0.25	0.24			
L10CT7M	----	1.3	1	1		0.41	0.39	0.35	0.32	0.30	0.29	0.28	0.27	0.26	0.25	0.24	0.23	0.23	

2900 RPM

NOTE: When pumping hot water over 180ºF (82.2ºC), check the NPSH available in the pumping system against the required pump NPSH shown on pump performance curves. Available NPSH must be greater than required NPSH.

PumpAgents.com
Wholesale Pump Agents

Close Coupled Regenerative Turbine

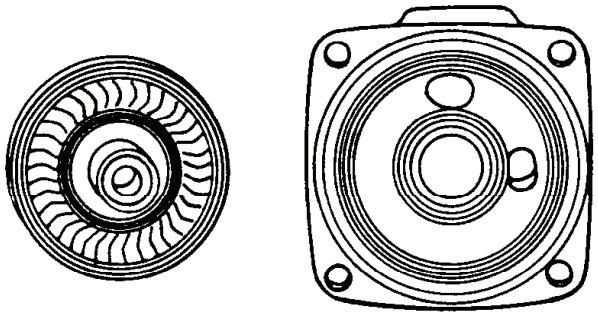

BURKS close coupled turbine pumps, Series CT, 3450 (60Hz) and 2900 (50Hz) R.P.M. and 4CT, 1725 R.P.M. are available for capacities up to 8 g.p.m. (0.50 L.P.S.) - pressures up to 150 p.s.i. (1034 kpa) and temperatures up to 225°F (107°C), come with standard mechanical shaft seal. Special shaft seals are available for higher temperatures and fluids other than water.

These compact turbine pumps are designed for pumping clear water and many other non-abrasive, lower viscosity liquids. They are especially engineered for boiler feed on steam process applications and will serve up to a 38 hp. boiler at a 3 to 1 safety factor. Available in bronze fitted as standard. All bronze or stainless steel construction also available. These pumps are recommended for many application requiring higher pressures and lower capacities.

BURKS is the only turbine pump with Life-Lok ® External Impeller Adjustment feature that allows readjustment of impeller without disturbing piping, disassembling pump or replacing parts. Gives up to 40% longer service life than turbine pumps of other designs.

MAXIMUM OPERATING CONDITIONS	
TEMPERATURE (For Standard Buna-N Seal)	225ºF (107ºC)
INLET PRESSURE	100 PSI (689kPa)
CASING WORKING PRESSURE	250 PSI (1723kPa)
VISCOSITY	200 SSU

MOTOR INFORMATION

Standard pump motors have open drip proof construction and are rated with jet pump service factors for continuous duty operation at all ratings shown. Single phase motors are 115/230 volt, 60 Hz, capacitor start/induction run with buit-in overload protection. Single phase motors 1/3, 1/2 & 3/4 HP are U.L. recognized.Three phase motors require a magnetic type starter which provides full 3-leg overload protection. Failure to use the correct starter and overloads will void the warranty.All three phase motors are 208-230/460 volt, 60/50Hz, 3450/2900 RPM.

FOR TEMPERATURES TO 500°F (260°C).

Series CT Pumps are available in a Jacketed Seal Cavity design for pumping hot oil, hot water and heat transfer fluids in common use in high temperature heating or cooling applications. This feature greatly extends seal life in high temperature applications. To order, add suffix “J” to pump catalog number for temperatures below 400°F (204°C) and add suffix “JK” to pump catalog number for temperatures over 400°F (204°). Example: 5CT5MJ. See Section on High Temperature Pumps for more information.

MATERIALS OF CONSTRUCTION			
PART	**BRONZE FITTED**	**ALL BRONZE**	**STAINLESS STEEL**
Frame	Cast Iron	Bronze	#316 Stainless
Impeller	Bronze (Monel Blades)	Bronze (Monel Blades)	#303 Stainless
Raceway	Bronze	Bronze	#303 Stainless
Shaft	#316 Stainless	#316 Stainless	#316 Stainless
Shaft Seal	Carbon-Ceramic SS - Buna-N	Carbon-Ceramic SS - Buna-N	Carbon-Ceramic SS - Buna-N

WARNING:
CANCER AND REPRODUCTIVE HARM -
WWW.P65WARNINGS.CA.GOV

Burks Pumps T37CT6M
www.PumpAgents.com - Click here for Pricing/Ordering for Pumps and Parts

Close Coupled Regenerative Turbine

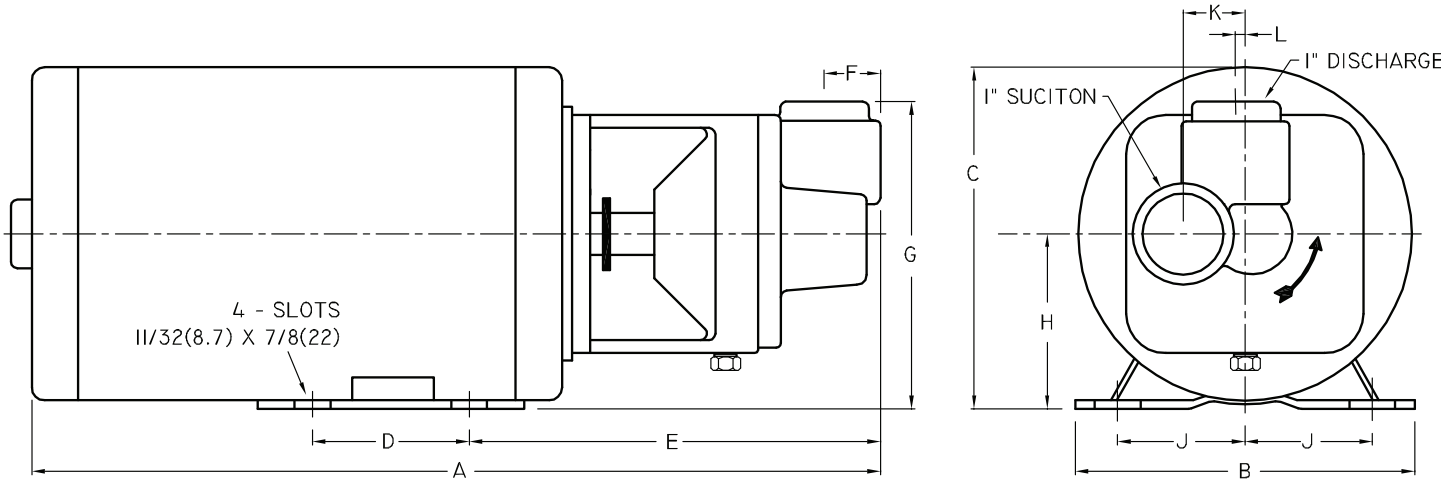

DIMENSIONS IN INCHES (mm)																		
Series	HP	Tappings		1 PH A	1 PH A (S.S.)	3 PH A	3 PH A (S.S.)	B	C	D	E	E (S.S.)	F	F (S.S.)	G	H	J	K	L
		Disc. NPT	Suct. NPT																
4CT	1/4	1	1	16¼ (413)	16.675 (424)	----	----	6½ (165)	6⅝ (168)	3 (76)	7⅞ (200)	8 5/16 (211)	1 (25)	1 (25)	5⅞ (149)	3½ (89)	2 7/16 (62)	1 5/32 (29)	3/16 (4.8)
CT	1/3	1	1	16¼ (413)	16.675 (424)	16¼ (413)	16.675 (424)	6½ (165)	6⅝ (168)	3 (76)	7⅞ (200)	8 5/16 (211)	1 (25)	1 (25)	5⅞ (149)	3½ (89)	2 7/16 (62)	1 5/32 (29)	3/16 (4.8)
	1/2	1	1																
	3/4	1	1																

Dimensions shown above are approximate maximum dimensions for standard pumps equipped with open drip-proof motors.

PumpAgents.com
Wholesale Pump Agents

A strainer, approximately 20 mesh, should be installed on the suction side of the pump to prevent chips, scale or hard foreign particales from entering the pump and damaging the raceway and impeller.

Burks Pumps T37CT6M
www.PumpAgents.com - Click here for Pricing/Ordering for Pumps and Parts

Close Coupled Regenerative Turbine

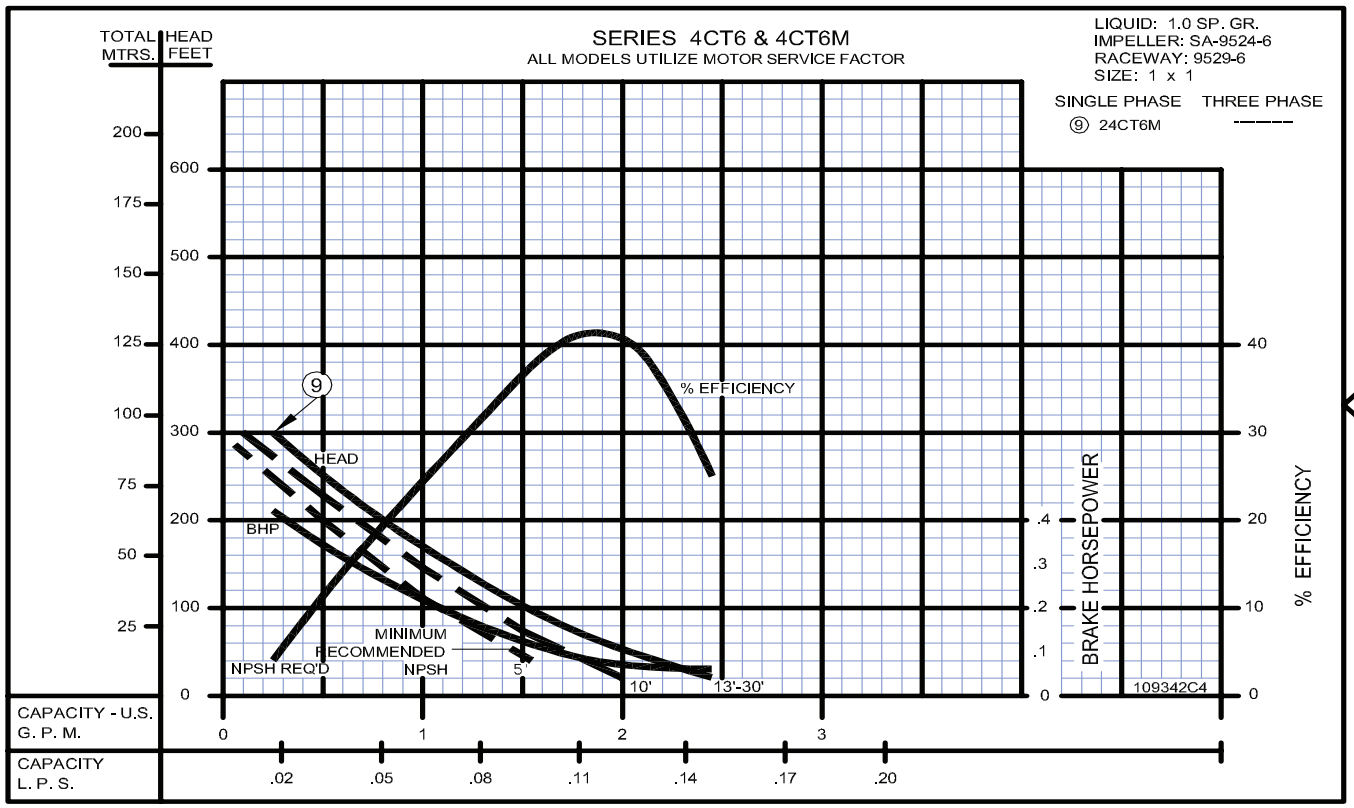

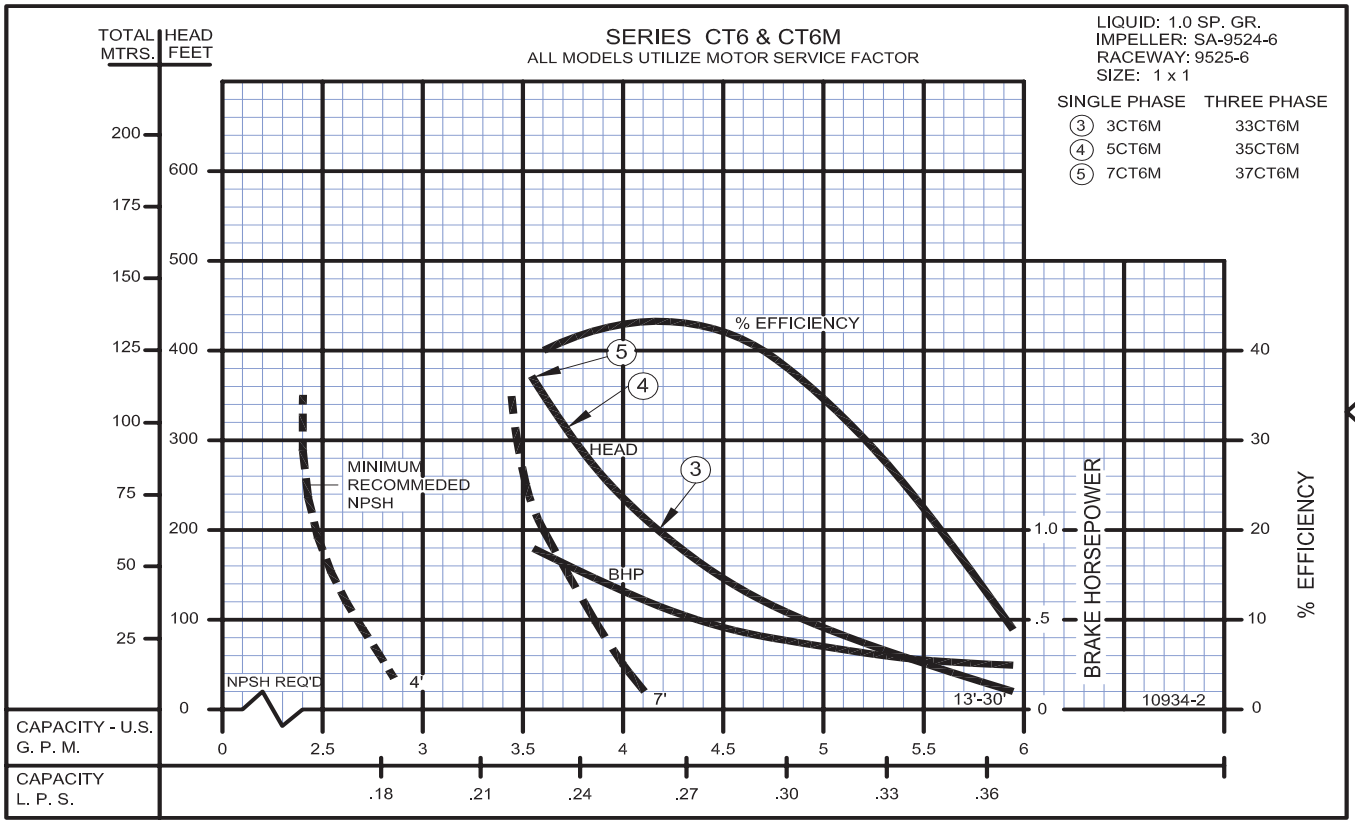

Close Coupled Regenerative Turbine

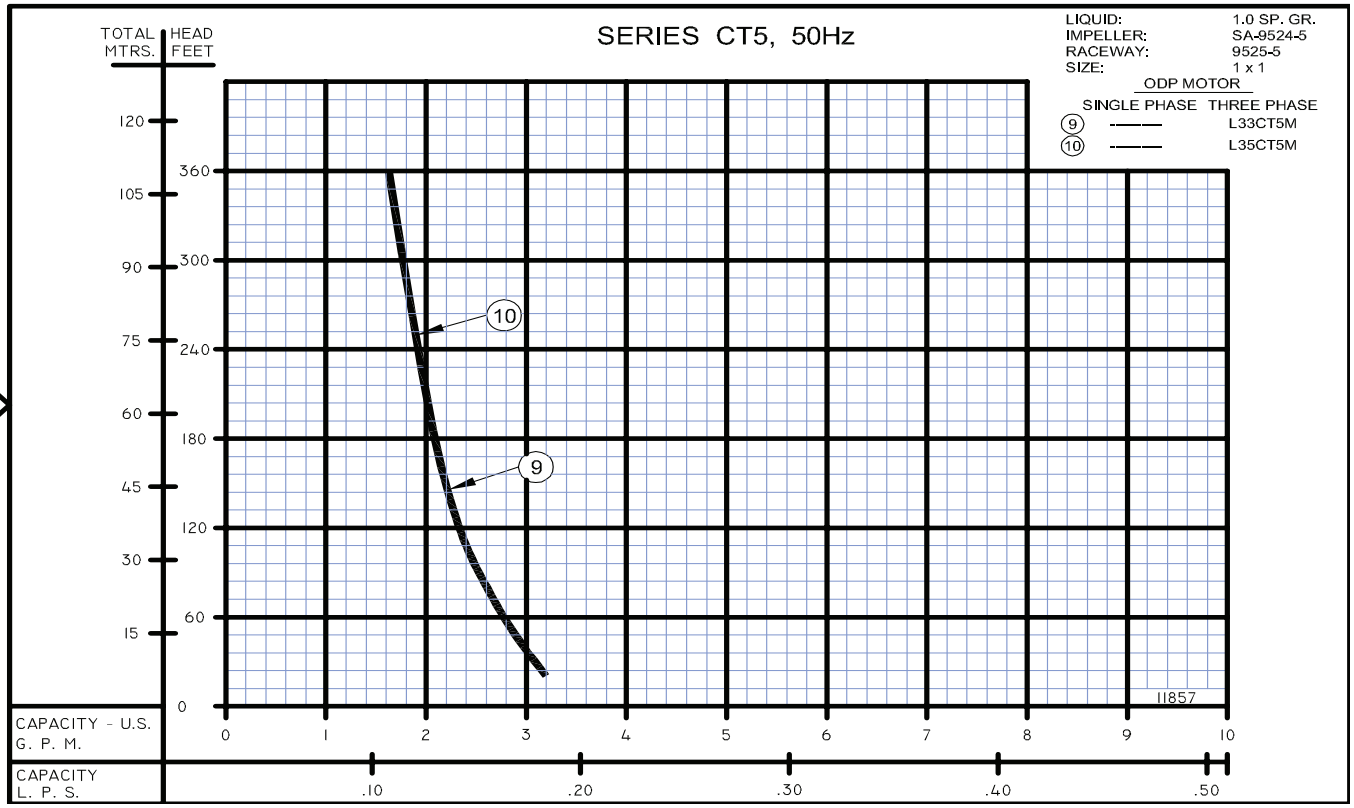

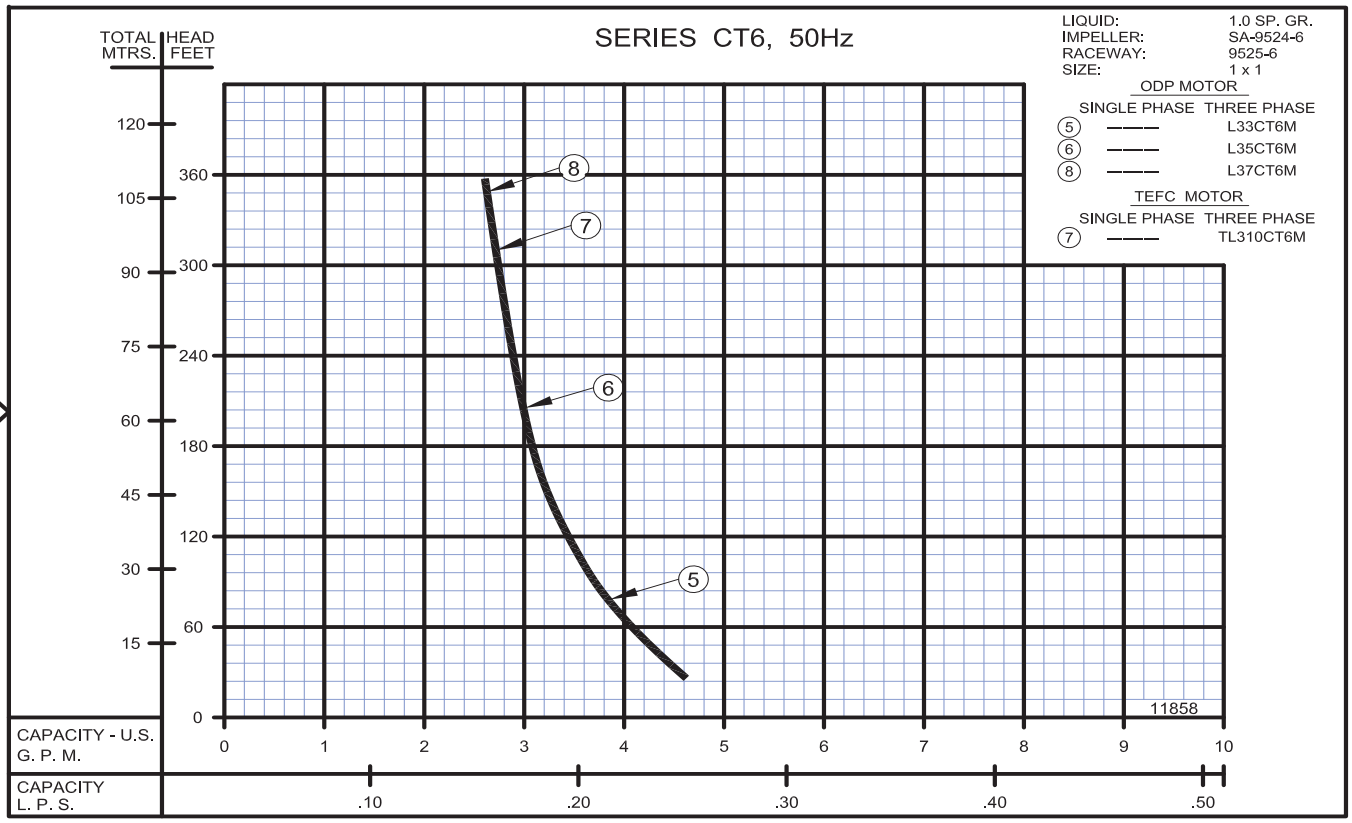

Turbines - Close Coupled

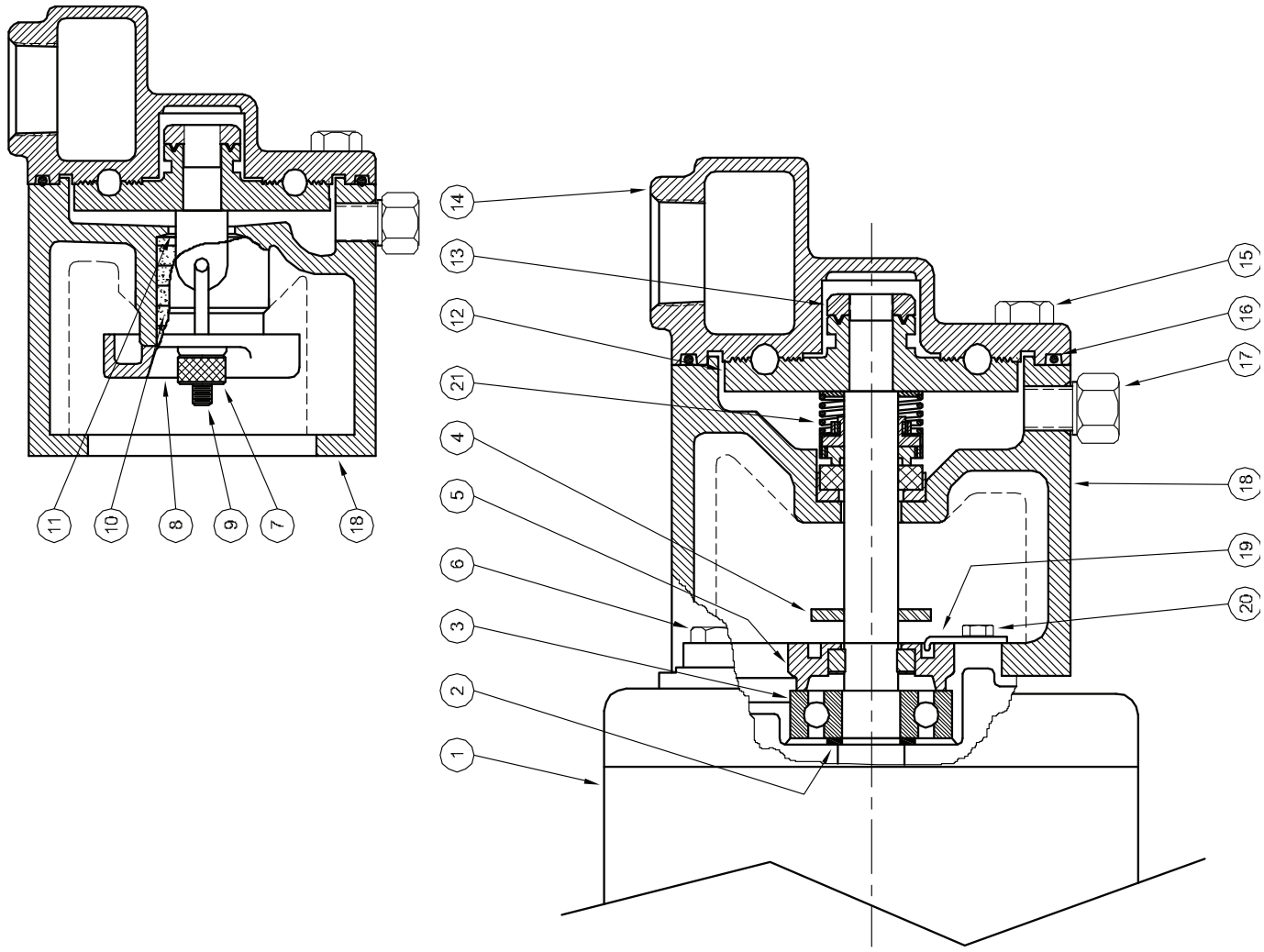

1 - MOTORS		
RPM & PHASE	PART NUMBER	HP
1725RPM - OPEN DRIP PROOF - 1 PHASE		
1725 RPM Single Phase (ODP)	09755	1/4
3450RPM - OPEN DRIP PROOF - 1 PHASE		
3450 RPM Single Phase (ODP)	09896 09897 09898	1/3 1/2 3/4
3450/2900 RPM - OPEN DRIP PROOF 3 PHASE		
3450/2900 RPM Three Phase (ODP)	09704 09637 09622	1/3 1/2 3/4
3450/2900 RPM - TOTALLY ENCLOSED		
3450/2900 RPM Single Phase (TEFC)	09793	3/4
3450/2900 RPM Three Phase (TEFC)	09794 20472 (60/50)	3/4 1
2900 RPM - 50 Hz OPEN DRIP PROOF & TOTALLY ENCLOSED		
2900 RPM Single Phase (ODP)	09896-50 09897-50 09898-50 20142	1/3 1/2 3/4 1
2900 RPM Three Phase (TEFC) - 60/50	20472	1

SYMBOL NUMBER	PART NUMBER	QTY	DESCRIPTION
2	02726	1	Washer - Bearing Back Up
3	09164	1	Ball Bearing - Pump End
	08935	1	Ball Bearing - Switch End (Not Shown)
4	08105	1	Slinger
5	01332-B	1	Screw, Impeller Adjusting
6	03121	4	Screw, 1/4-20 x 3/4
7	04211	2	Gland Nut
8	05804-A	1	Gland, Stuffing Box
9	07003	2	Gland Bolt
10	08091	5	Packing
11	08085	1	Washer - Stuffing Box
* 12	SA09524-5	1	Impeller - 5/16 CT5M
	SA09524-6	1	Impeller - 3/8 CT6M
	SA09524-7	1	Impeller - 7/16 CT7M
	SA09524-8	1	Impeller - 1/2 CT8M
13	02258	1	Nut, Impeller Lock
14	09525-5	1	Raceway - 5/16 CT5M
	09525-6	1	Raceway - 3/8 CT6M
	09525-7	1	Raceway - 7/16 CT7M
	09525-8	1	Raceway - 1/2 CT8M
15	01928	4	Screw, 3/8-16 x 1" Lg
16	09530	1	O-Ring Gasket - Buna-N
	09699	1	O-Ring Gasket - Viton
	22134	1	O-Ring Gasket - EPT
	09530-T	1	O-Ring Gasket - Teflon

SYMBOL NUMBER	PART NUMBER	QTY	DESCRIPTION
17	04236	1	Plug, 1/4-18 NPT
18	09522	1	Frame (for packing gland)
	09521	1	Frame (for mechanical seal)
19	07576	1	Adjusting Screw Lock
20	07577	1	Screw, #10 x 3/4" Lg
21	08514	1	Mechanical Seal - Buna-N
	09762	1	Mechanical Seal - Viton
	20764-C	1	Mechanical Seal - EPT
DIFFERING PARTS FOR ALL BRONZE CONSTRUCTION			
6	03121-B	4	Screw, 1/4-20 x 3/4" Lg
15	03289	4	Screw, 3/8-16 x 1" Lg
18	09522-A	1	Frame (for packing gland)
	09521-A	1	Frame (for mechanical seal)

(*) Standard impellers are suitable for fluid temperatures to 250°F (121°C). For higher temperatures, add the designation "HT" to impeller part number.
This includes all "MJ" Jacketed Seal Pumps. EXAMPLE: SA09524-HT-5

NOTE 1: Impeller and raceway must be ordered as a repair kit.
NOT available individually.

REPAIR KITS FOR CT SERIES PUMPS

REPAIR KIT P/N (STD Buna-N)	MODEL	REPAIR KIT P/N (Viton)	MODEL	REPAIR KIT P/N (EPT)	MODEL	REPAIR KIT P/N (High Temp)	MODEL
20158-5	CT5M	20158-5-MV	CT5MV	20158-5-ME	CT5ME	20158-HT-5	CT5MV-HT
20158-6	CT6M	20158-6-MV	CT6MV	20158-6-ME	CT6ME	20158-HT-6	CT6MV-HT
20158-7	CT7M	20158-7-MV	CT7MV	20158-7-ME	CT7ME	20158-HT-7	CT7MV-HT
20158-8	CT8M	20158-8-MV	CT8MV	20158-8-ME	CT8ME		

KIT INCLUDES: Impeller, Raceway, Shaft Seal, O-Ring Gasket, Impeller Locknut and Instructions.

WARNING:
CANCER AND REPRODUCTIVE HARM -
WWW.P65WARNINGS.CA.GOV