Burks Pumps T320CS8M-AB
www.PumpAgents.com - Click here for Pricing/Ordering for Pumps and Parts

Close Coupled Regenerative Turbine

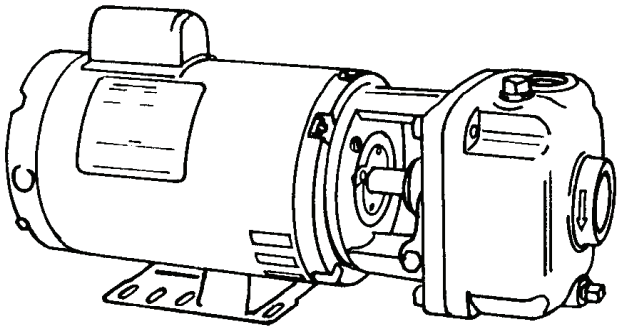

4CS - 1725 RPM - 60Hz.
CS - 3450 RPM - 60Hz.

(See Indivdual curves for symbol number)

*MAXIMUM HEAD			
Symbol Number	HP	Catalog Number	
		1 - Phase	3 - Phase
1	1/3	34CS5M	334CS5M
2	1/3	34CS6M	334CS6M
3	1/2	54CS6M	354CS6M
4	1/3	34CS7M	334CS7M
5	1/2	54CS7M	354CS7M
6	1/2	54CS8M	354CS8M
7	1	10CS5M	310CS5M
8	1½	15CS5M	315CS5M
9	1	10CS6M	310CS6M
10	1½	15CS6M	315CS6M
11	2	20CS6M	320CS6M
12	1½	15CS7M	315CS7M
13	2	20CS7M	320CS7M
14	3	----	330CS7M
15	2	20CS8M	320CS8M
16	3	----	330CS8M
17	5	----	350CS8M
18	3	----	330CS9M
19	5	----	350CS9M

(*) For Standard Pumps with ODP motors

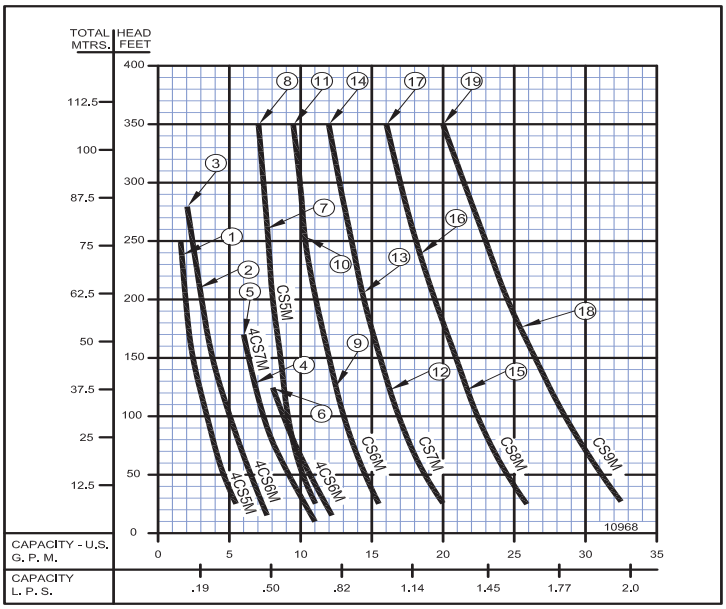

CS - 2900 RPM - 50Hz.

(See Indivdual curves for symbol number)

MAXIMUM HEAD		
Symbol Number	HP	Catalog Number
* 1	2.0	L320CS9M
2	2.6	L330CS9M
3	4.0	L340CS9M
4	1.5	L315CS8M
* 5	2.0	L320CS8M
6	2.6	L330CS8M
7	1.5	L315CS7M
* 8	2.0	L320CS7M
9	2.6	L330CS7M
10	1.0	L310CS6M
11	1.5	L315CS6M
* 12	2.0	L320CS6M
13	1.0	L310CS5M
14	1.0	L315CS5M

(*) Pump numbers 1, 5, 8 & 12 are the only pump available in single phase 115/230 volt.
All of the pumps above are available with stuffing box.

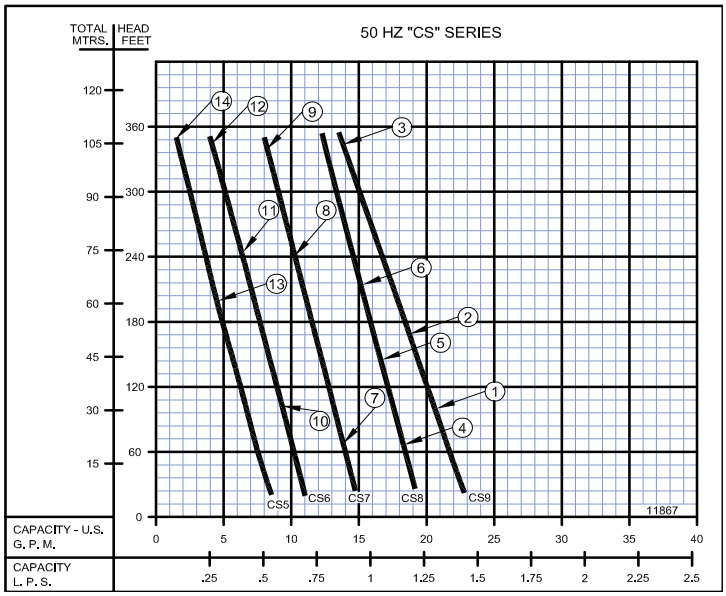

Burks Pumps T320CS8M-AB
www.PumpAgents.com - Click here for Pricing/Ordering for Pumps and Parts

Close Coupled Regenerative Turbine

60 HZ - PERFORMANCE & SELECTION CHART

Catalog Number		HP	Tappings		PSI Feet	TOTAL HEAD													
			Suct. NPT	Disc. NPT		8.6 20	17.2 40	26 60	43.3 100	54.1 125	64.9 150	75.8 175	86.6 200	97.4 225	108.3 250	119.1 275	130 300	140.1 325	151.6 350
1 Phase	3 Phase					CAPACITY IN GPM													
34CS5M	334CS5M	1/3	1¼	1		5.8	4.9	4.3	3.3	2.8	2.4	2.1	1.8	1.6					
34CS6M 54CS6M	334CS6M 354CS6M	1/3 1/2				7.8 7.8	6.9 6.9	6.3 6.3	5.2 5.2	4.6 4.6	4.1 4.1	3.7 3.7	3.3 3.3	2.9	2.6	2.3			
34CS7M 54CS7M	334CS7M 354CS7M	1/3 1/2				10.4 10.4	9.4 9.4	8.5 8.5	7.2 7.2	6.5 6.5	5.9	5.4							
54CS8M	354CS8M	1/2				12.2	11.3	10.4	9.0	8.2									
10CS5M 15CS5M	310CS5M 315CS5M	1 1½	1¼	1		11 11	10.6 10.6	10.1 10.1	9.3 9.3	9 9	8.5 8.5	8.2 8.2	8 8	7.7 7.7	7.5	7.4	7.2	7.1	
10CS6M 15CS6M 20CS6M	310CS6M 315CS6M 320CS6M	1 1½ 2				16 16 16	15.2 15.2 15.2	14.5 14.5 14.5	13.5 13.5 13.5	12.8 12.8 12.8	12.4 12.4	12 12	11.5 11.5	11 11	10.7 10.7	10.5	10.1	9.7	9.5*
15CS7M 20CS7M ----	315CS7M 320CS7M 330CS7M	1½ 2 3				20.5 20.5 20.5	19.6 19.6 19.6	19.5 19.5 19.5	17.3 17.3 17.3	16.5 16.5	16 16	15.3 15.3	14.7 14.7	14.2	13.7	13.3	12.8	12.5	12*
20CS8M ---- ----	320CS8M 330CS8M 350CS8M	2 3 5				26.5 26.5 26.5	25.5 25.5 25.5	24.6 24.6 24.6	23 23 23	22 22 22	21.3 21.3	20.5 20.5	19.8 19.8	19.2 19.2	18.5	18	17.4	16.8	16.3*
---- ----	330CS9M 350CS9M	3 5				32.5 32.5	31.5 31.5	30.5 30.5	28.6 28.6	27.5 27.5	26.5 26.5	25.6	24.7	23.8	23	22.2	21.5	20.7	20*

1750 RPM

3450 RPM

* Rated to 358 ft (155 psi) per performance curve.

60 HZ - PERFORMANCE & SELECTION CHART

Catalog Number		HP	Tappings		kPa Meters	TOTAL HEAD													
			Suct. NPT (in)	Disc. NPT (in)		59 6.1	119 12.1	179 18.2	299 30.5	373 38.1	447 45.7	523 53.3	597 61	672 68.6	747 76.2	821 83.8	896 91.4	966 99.1	1045 106.6
1 Phase	3 Phase					CAPACITY IN LPS													
34CS5M	334CS5M	1/3	1¼	1		0.36	0.30	0.27	0.20	0.17	0.15	0.13	0.11	1.6					
34CS6M 54CS6M	334CS6M 354CS6M	1/3 1/2				0.49 0.49	0.43 0.43	0.39 0.39	0.32 0.32	0.29 0.29	0.25 0.25	0.23 0.23	0.20 0.20	0.18	0.16	0.14			
34CS7M 54CS7M	334CS7M 354CS7M	1/3 1/2				0.65 0.65	0.59 0.59	0.53 0.53	0.45 0.45	0.41 0.41	0.37	0.34							
54CS8M	354CS8M	1/2				0.76	0.71	0.65	0.56	0.51									
10CS5M 15CS5M	310CS5M 315CS5M	1 1½	1¼	1		0.69 0.69	0.66 0.66	0.63 0.63	0.58 0.58	0.56 0.56	0.53 0.53	0.51 0.51	0.50 0.50	0.48 0.48	0.47	0.46	0.45	0.44	
10CS6M 15CS6M 20CS6M	310CS6M 315CS6M 320CS6M	1 1½ 2				1.00 1.00 1.00	0.95 0.95 0.95	0.91 0.91 0.91	0.85 0.85 0.85	0.80 0.80 0.80	0.78 0.78	0.75 0.75	0.72 0.72	0.69 0.69	0.67 0.67	0.66	0.63	0.61	0.59
15CS7M 20CS7M ----	315CS7M 320CS7M 330CS7M	1½ 2 3				1.29 1.29 1.29	1.24 1.24 1.24	1.23 1.23 1.23	1.09 1.09 1.09	1.04 1.04	1.00 1.00	0.96 0.96	0.92 0.92	0.89	0.86	0.83	0.80	0.78	0.75
20CS8M ---- ----	320CS8M 330CS8M 350CS8M	2 3 5				1.67 1.67 1.67	1.60 1.60 1.60	1.55 1.55 1.55	1.45 1.45 1.45	1.38 1.38 1.38	1.34 1.34	1.29 1.29	1.24 1.24	1.21 1.21	1.16	1.13	1.09	1.05	1.02
---- ----	330CS9M 350CS9M	3 5				2.05 2.05	1.98 1.98	1.92 1.92	1.80 1.80	1.73 1.73	1.67 1.67	1.61	1.55	1.50	1.45	1.40	1.35	1.30	1.26

1750 RPM

3450 RPM

NOTE: When pumping hot water over 180ºF (82.2ºC), check the NPSH available in the pumping system against the required pump NPSH shown on pump performance curves. Available NPSH must be greater than required NPSH.

Burks Pumps T320CS8M-AB
www.PumpAgents.com - Click here for Pricing/Ordering for Pumps and Parts

Close Coupled Regenerative Turbine

50 HZ - PERFORMANCE & SELECTION CHART

Catalog Number		HP	Tappings		PSI Feet	TOTAL HEAD													
			Suct. NPT	Disc. NPT		8.6 20	17.2 40	26 60	43.3 100	54.1 125	64.9 150	75.8 175	86.6 200	97.4 225	108.3 250	119.1 275	130 300	140.1 325	151.6 350
1 Phase	3 Phase					CAPACITY IN GPM													
	L310CS5M L315CS5M	1 1.5	1¼	1		8.5 8.5	8.0 8.0	7.5 7.5	6.5 6.5	6.0 6.0	5.5 5.5	5.0 5.0	4.5 4.5	4.0	3.5	3.0	2.5	2.0	1.5*
	L310CS6M L315CS6M	1 1.5				11.0 11.0	10.5 10.5	10.0 10.0	9.3 9.3	9.0	8.3	7.8	7.3	6.8	6.3				
L20CS6M	L320CS6M	2				11.0	10.5	10.0	9.3	9.0	8.3	7.8	7.3	6.8	6.3	5.8	5.0	4.5	4.0*
	L315CS7M L330CS7M	1.5 2.6				14.8 14.8	14.3 14.3	14.0 14.0	13.0 13.0	12.8 12.8	12.0	11.6	11.0	10.5	10.0	9.5	9.0	8.5	8.0*
L20CS7M	L320CS7M	2				14.8	14.3	14.0	13.0	12.8	12.0	11.6	11.0	10.5					
	L315CS8M L330CS8M	1.5 2.6				19.0 19.0	18.8 18.8	18.3 18.3	17.5	17.0	16.5	16.0	15.5	15.0	14.5	14.0	13.3	13.0	12.3*
L20CS8M	L320CS8M	2				19.0	18.8	18.3	17.5	17.0	16.5								
L20CS9M	L320CS9M	2				22.8	22.3	21.8	20.5										
---- ----	L330CS9M L340CS9M	2.6 4.0				22.8 22.8	22.3 22.3	21.8 21.8	20.5 20.5	20.0 20.0	19.3 19.3	18.8 18.8	18.0	17.0	16.5	15.8	15.0	14.3	13.5*

2900 RPM

* Rated to 358 ft (155 psi) per performance curve.

50 HZ - PERFORMANCE & SELECTION CHART

Catalog Number		HP	Tappings		kPa Meters	TOTAL HEAD													
			Suct. NPT (in)	Disc. NPT (in)		59 6.1	119 12.1	179 18.2	299 30.5	373 38.1	447 45.7	523 53.3	597 61	672 68.6	747 76.2	821 83.8	896 91.4	966 99.1	1045 106.6
1 Phase	3 Phase					CAPACITY IN LPS													
	L310CS5M L315CS5M	1 1.5	1¼	1		0.54 0.54	0.50 0.50	0.47 0.47	0.41 0.41	0.38 0.38	0.35 0.35	0.32 0.32	0.28 0.28	0.25	0.22	0.19	0.16	0.13	0.09
	L310CS6M L315CS6M	1 1.5				0.69 0.69	0.66 0.66	0.63 0.63	0.58 0.58	0.56	0.52	0.49	0.46	0.42	0.39				
L20CS6M	L320CS6M	2				0.69	0.66	0.63	0.58	0.56	0.52	0.49	0.46	0.42	0.39	0.36	0.31	0.28	0.25
	L315CS7M L330CS7M	1.5 2.6				0.93 0.93	0.90 0.90	0.88 0.88	0.82 0.82	0.80 0.80	0.75	0.73	0.69	0.66	0.63	0.59	0.56	0.53	0.50
L20CS7M	L320CS7M	2				0.93	0.90	0.88	0.82	0.80	0.75	0.73	0.69	0.66					
	L315CS8M L330CS8M	1.5 2.6				1.19 1.19	1.18 1.18	1.15 1.15	1.10	1.07	1.04	1.00	0.97	0.94	0.91	0.88	0.83	0.82	0.77
L20CS8M	L320CS8M	2				1.19	1.18	1.15	1.10	1.07	1.04								
L20CS9M	L320CS9M	2				1.43	1.40	1.37	1.29										
	L330CS9M L340CS9M	2.6 4.0				1.43 1.43	1.40 1.40	1.37 1.37	1.29 1.29	1.26 1.26	1.21 1.21	1.18 1.18	1.13	1.07	1.04	0.99	0.94	0.90	0.85

2900 RPM

NOTE: When pumping hot water over 180ºF (82.2ºC), check the NPSH available in the pumping system against the required pump NPSH shown on pump performance curves. Available NPSH must be greater than required NPSH.

Close Coupled Regenerative Turbine

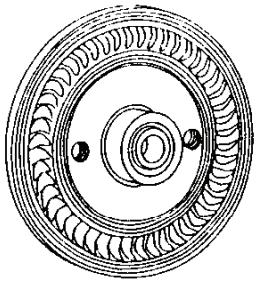

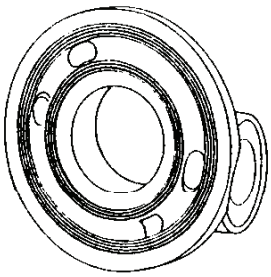

BURKS exclusive unique regenerative type turbine pumps are designed to handle clear water and many other non-abrasive, lower viscosity liquids on high pressure, low capacity applications with the greatest possible efficiency.

BURKS is the only turbine pump with Life-Lok ® External Impeller Adjustment feature that allows readjustment of impeller without disturbing piping, disassembling pump or replacing parts. Gives up to 40% longer service life than turbine pumps of other designs.

- Self-Priming
- Compact, Space-saving size
- No coupling - eliminates misalignment problemts
- Dependable carbon/ceramic mechanical shaft seal for temperatures to 225°F (107°C).
- Bronze impeller with Monel blades - the only moving part
- Bronze raceway with cast-in vortex pockets - will not vapor lock
- #303 Stainless Steel pump shaft
- Easy to service
- Every pump factory tested
- Available Bronze fitted, All Bronze, Stainless Steel

WARNING:
CANCER AND REPRODUCTIVE HARM -
WWW.P65WARNINGS.CA.GOV

MAXIMUM OPERATING CONDITIONS	
TEMPERATURE (For Standard Buna-N Seal)	225ºF (107ºC)
INLET PRESSURE	100 PSI (689kPa)
CASING WORKING PRESSURE	250 PSI (1723kPa)

MOTOR INFORMATION

4CS Series:
Single Phase motors are 115/208-230 Volt, 60Hz, 1750RPM
Three Phase motors are 208-230/460 Volts, 60/50Hz, 1750/1450RPM

CS Series:
Single Phase motors are 115/208-230 Volt, 60 Hz, 3450RPM
Three Phase 1, 11/2 & 2HP. - 208-230/460 Volt, 60/50 Hz., 3450/2900 RPM
Three Phase 3 & 5 HP - 208-230/460 Volt, 60 Hz, 3450RPM

Standard pump motors have open drip proof construction and are rated with jet pump service factors for continuous duty operation at all ratings shown.
Single phase motors are capacitor start/induction run with buit-in overload protection.
Three phase motors require a magnetic type starter which provides full 3-leg overload protection. Failure to use the correct starter and overloads will void the warranty.

FOR TEMPERATURES TO 500°F (260°C).

Series CS Pumps are available in a Jacketed Seal Cavity design for pumping hot oil, hot water and heat transfer fluids in common use in high temperature heating or cooling applications. This feature greatly extends seal life in high temperature applications. To order, add suffix “J” to pump catalog number for temperatures below 400°F (204°C) and add suffix “JK” to pump catalog number for temperatures over 400°F (204°). Example: 15CS5MJ. See Section on High Temperature Pumps for more information.

MATERIALS OF CONSTRUCTION			
PART	**BRONZE FITTED**	**ALL BRONZE**	**STAINLESS STEEL**
Frame	Cast Iron	Bronze	#316 Stainless
Case	Cast Iron	Bronze	#316 Stainless
Impeller	Bronze (Monel Blades)	Bronze (Monel Blades)	#303 Stainless
Raceway	Bronze	Bronze	#303 Stainless
Shaft	#303 Stainless	#303 Stainless	#303 Stainless
Shaft Seal	Carbon-Ceramic SS - Buna-N	Carbon-Ceramic SS - Buna-N	Carbon-Ceramic SS - Buna-N

Burks Pumps T320CS8M-AB
www.PumpAgents.com - Click here for Pricing/Ordering for Pumps and Parts

Close Coupled Regenerative Turbine

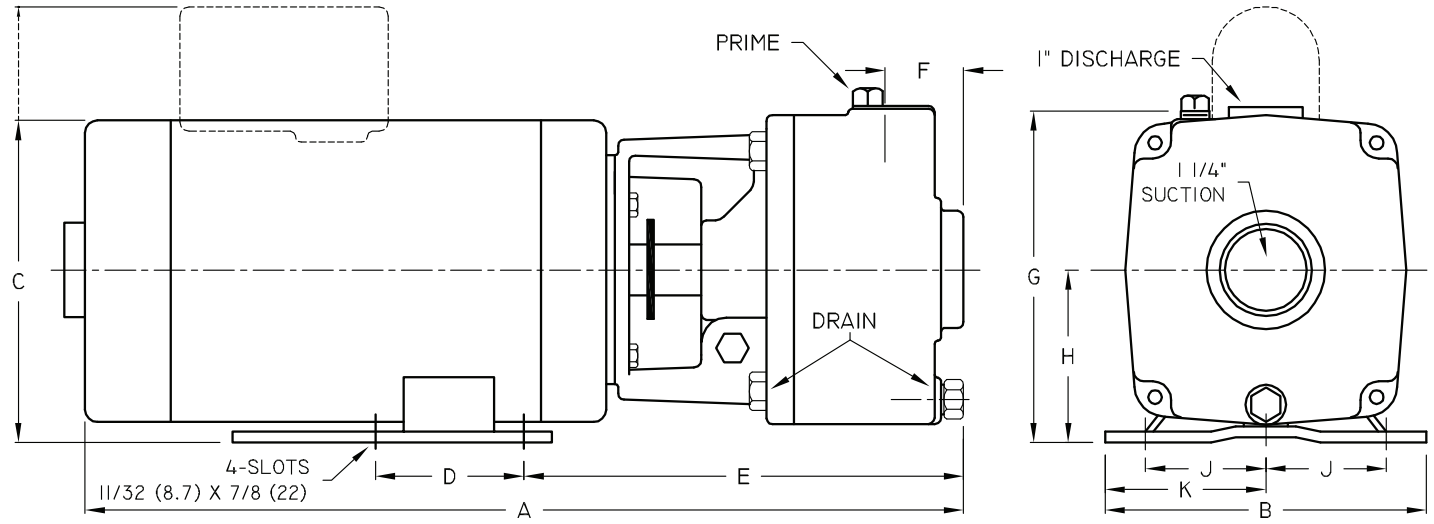

DIMENSIONS IN INCHES - ODP

Series	HP	Tappings		1 PH A	1 PH A (S.S.)	3 PH A	3 PH A (S.S.)	B	1 PH C	3 PH C	D	E	E (S.S.)	F	F (S.S.)	G	H	J	K
		Disc. NPT (in)	Suct. NPT (in)																
4CS	1/3	1	1¼	17⅝	18 1/16	16⅜	16 13/16	6½	6⅝	6⅝	3	9	9 7/16	1¾	1¾	6¾	3½	2 7/16	3¼
	1/2	1	1¼	17⅝	18 1/16	16⅝	16 13/16	6½	6⅝	6⅝	3	9	9 7/16	1¾	1¾	6¾	3½	2 7/16	3¼
CS	1	1	1¼	18 5/16	18¾	18 5/16	18¾	6½	6⅝	6⅝	3	9	9 7/16	1¾	1¾	6¾	3½	2 7/16	3¼
	1½	1	1¼	19 1/16	19½	19 1/16	19½	6½	8 13/16	6⅝	3	9	9 7/16	1¾	1¾	6¾	3½	2 7/16	3¼
	2	1	1¼	19 9/16	20	19 1/16	19½	6½	8 13/16	6⅝	3	9	9 7/16	1¾	1¾	6¾	3½	2 7/16	3¼
	3	1	1¼	---	---	19 9/16	20	6½	---	6⅝	3	9	9 7/16	1¾	1¾	6¾	3½	2 7/16	3¼
	5	1	1¼	---	---	20 15/16	21⅜	6½	---	6⅝	3	9	9 7/16	1¾	1¾	6¾	3½	2 7/16	3¼

DIMENSIONS IN INCHES - TEFC

Series	HP	Tappings		1 PH A	1 PH A (S.S.)	3 PH A	3 PH A (S.S.)	B	1 PH C	3 PH C	D	E	E (S.S.)	F	F (S.S.)	G	H	J	K
		Disc. NPT (in)	Suct. NPT (in)																
CS	1½	1	1¼	---	---	18½	19⅛	6½	---	6⅝	3	9	9 7/16	1¾	1¾	6¾	3½	2 7/16	3¼
	2	1	1¼	---	---	18½	19⅛	6½	---	6⅝	3	9	9 7/16	1¾	1¾	6¾	3½	2 7/16	3¼
	3	1	1¼	---	---	20¾	21⅜	6½	---	6⅝	3	9	9 7/16	1¾	1¾	6¾	3½	2 7/16	3¼
	5	1	1¼	---	---	20⅝	21¼	6½	---	6⅝	3	9	9 7/16	1¾	1¾	6¾	3½	2 7/16	3¼

PumpAgents.com
Wholesale Pump Agents

A strainer, approximately 20 mesh, should be installed on the suction side of the pump to prevent chips, scale or hard foreign particales from entering the pump and damaging the raceway and impeller.

Close Coupled Regenerative Turbine

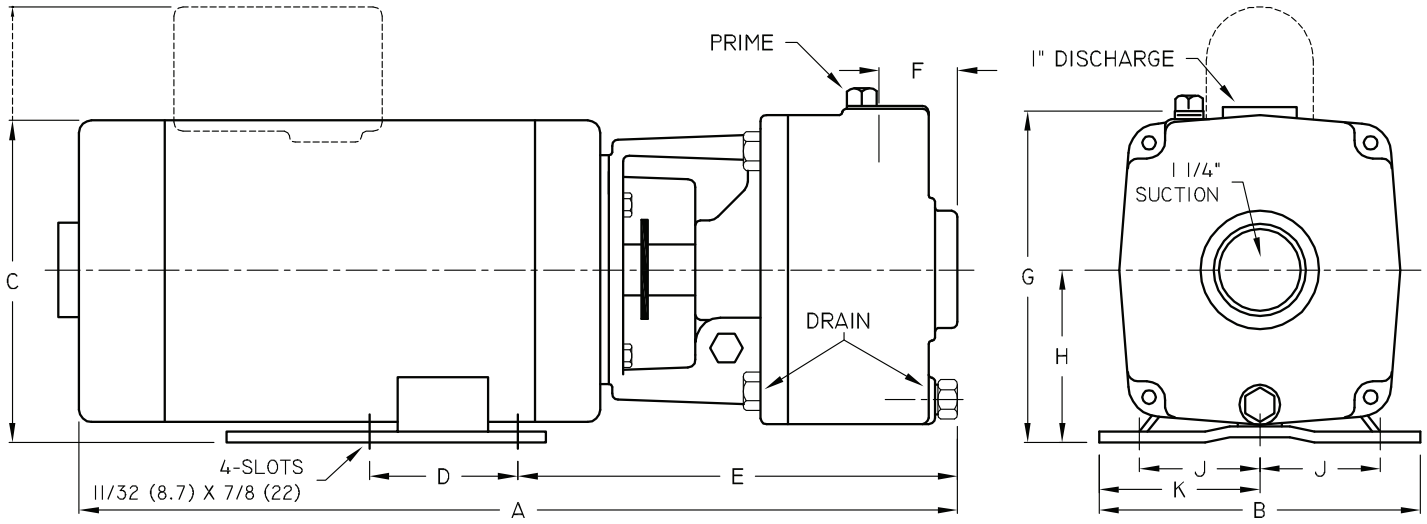

Series	HP	Tappings		DIMENSIONS IN MILLIMETERS - ODP															
		Disc. NPT (in)	Suct. NPT (in)	1 PH A	1 PH A (S.S.	3 PH A	3 PH A (S.S.)	B	1 PH C	3 PH C	D	E	E (S.S.)	F	F (S.S.)	G	H	J	K
4CS	1/3	1	1¼	447	459	415	427	165	168	168	76	228	240	44	44	171	89	62	82
	1/2	1	1¼	447	459	422	427	165	168	168	76	228	240	44	44	171	89	62	82
CS	1	1	1¼	465	476	465	476	165	168	168	76	228	240	44	44	171	89	62	82
	1½	1	1¼	484	495	484	495	165	223	168	76	228	240	44	44	171	89	62	82
	2	1	1¼	496	508	484	495	165	223	168	76	228	240	44	44	171	89	62	82
	3	1	1¼	---	---	496	508	165	---	168	76	228	240	44	44	171	89	62	82
	5	1	1¼	---	---	531	543	165	---	168	76	228	240	44	44	171	89	62	82

Series	HP	Tappings		DIMENSIONS IN MILLIMETERS - TEFC															
		Disc. NPT (in)	Suct. NPT (in)	1 PH A	1 PH A (S.S.	3 PH A	3 PH A (S.S.)	B	1 PH C	3 PH C	D	E	E (S.S.)	F	F (S.S.)	G	H	J	K
CS	1½	1	1¼	---	---	470	486	165	---	168	76	228	240	44	44	171	89	62	82
	2	1	1¼	---	---	470	486	165	---	168	76	228	240	44	44	171	89	62	82
	3	1	1¼	---	---	527	543	165	---	168	76	228	240	44	44	171	89	62	82
	5	1	1¼	---	---	524	540	165	---	168	76	228	240	44	44	171	89	62	82

A strainer, approximately 20 mesh, should be installed on the suction side of the pump to prevent chips, scale or hard foreign particales from entering the pump and damaging the raceway and impeller.

Series: CS

60 Hz. Performance

burks®
www.cranepumps.com

Close Coupled Regenerative Turbine

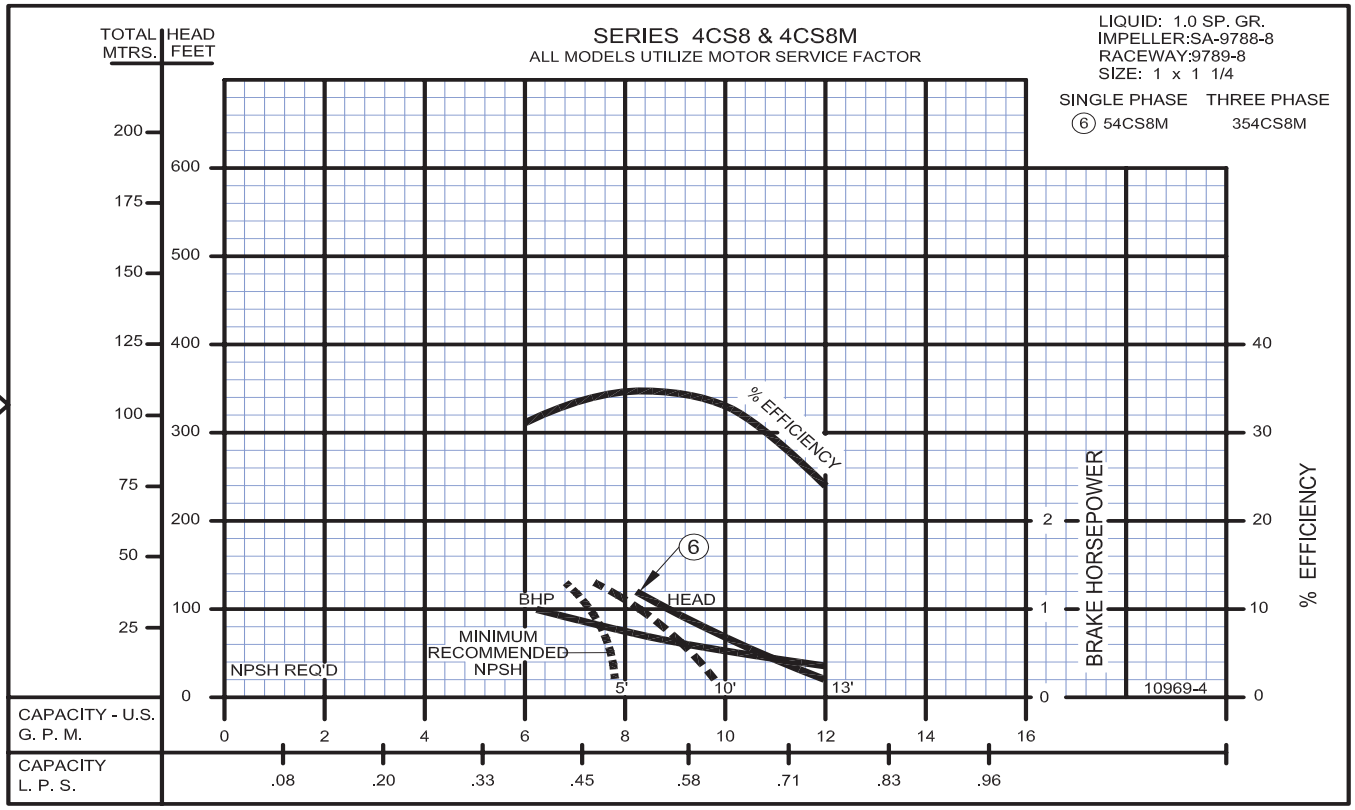

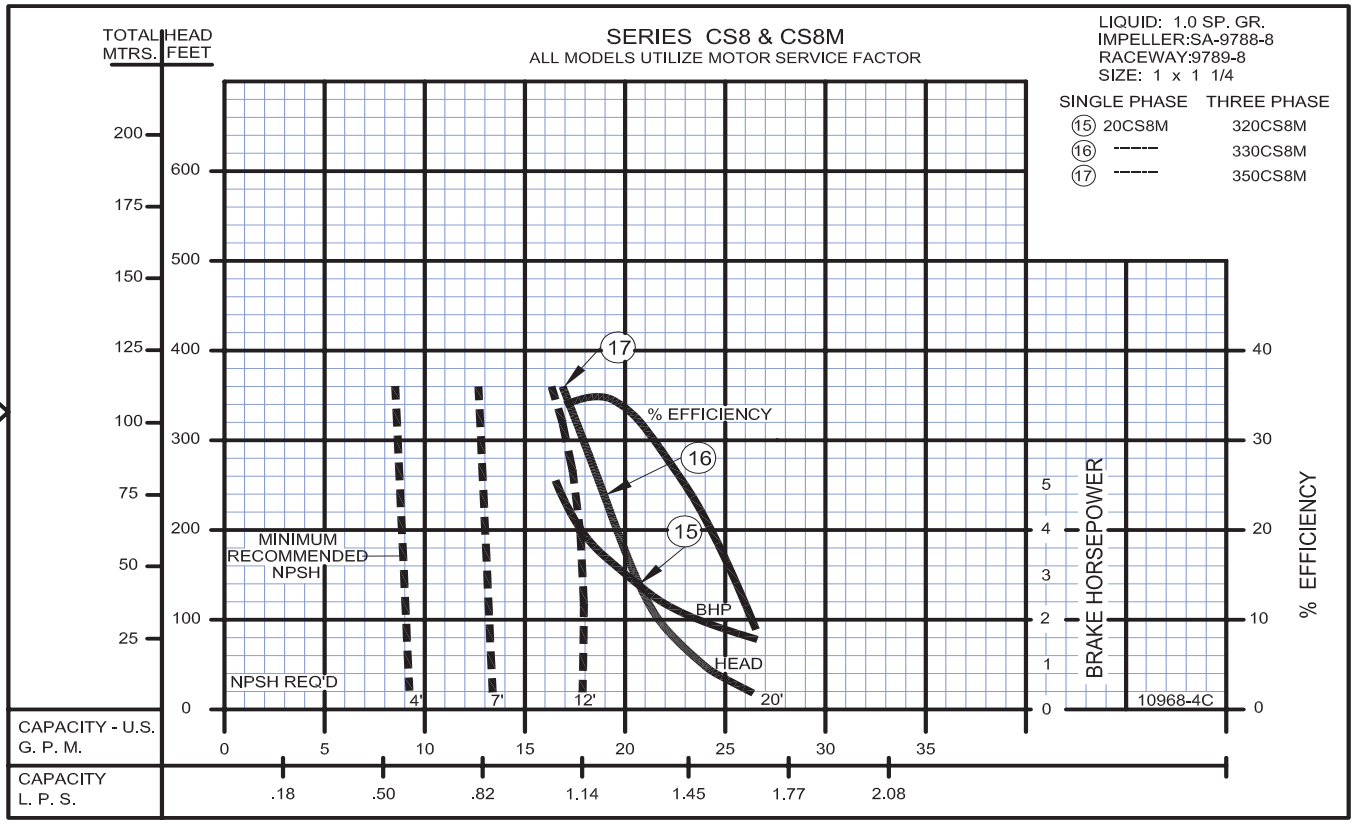

CRANE®
A Crane Co. Company

PUMPS & SYSTEMS

PumpAgents.com
Wholesale Pump Agents

USA: (937) 778-8947 • Canada: (905) 457-6223 • International: (937) 615-3598

Burks Pumps T320CS8M-AB
www.PumpAgents.com - Click here for Pricing/Ordering for Pumps and Parts

Close Coupled Regenerative Turbine

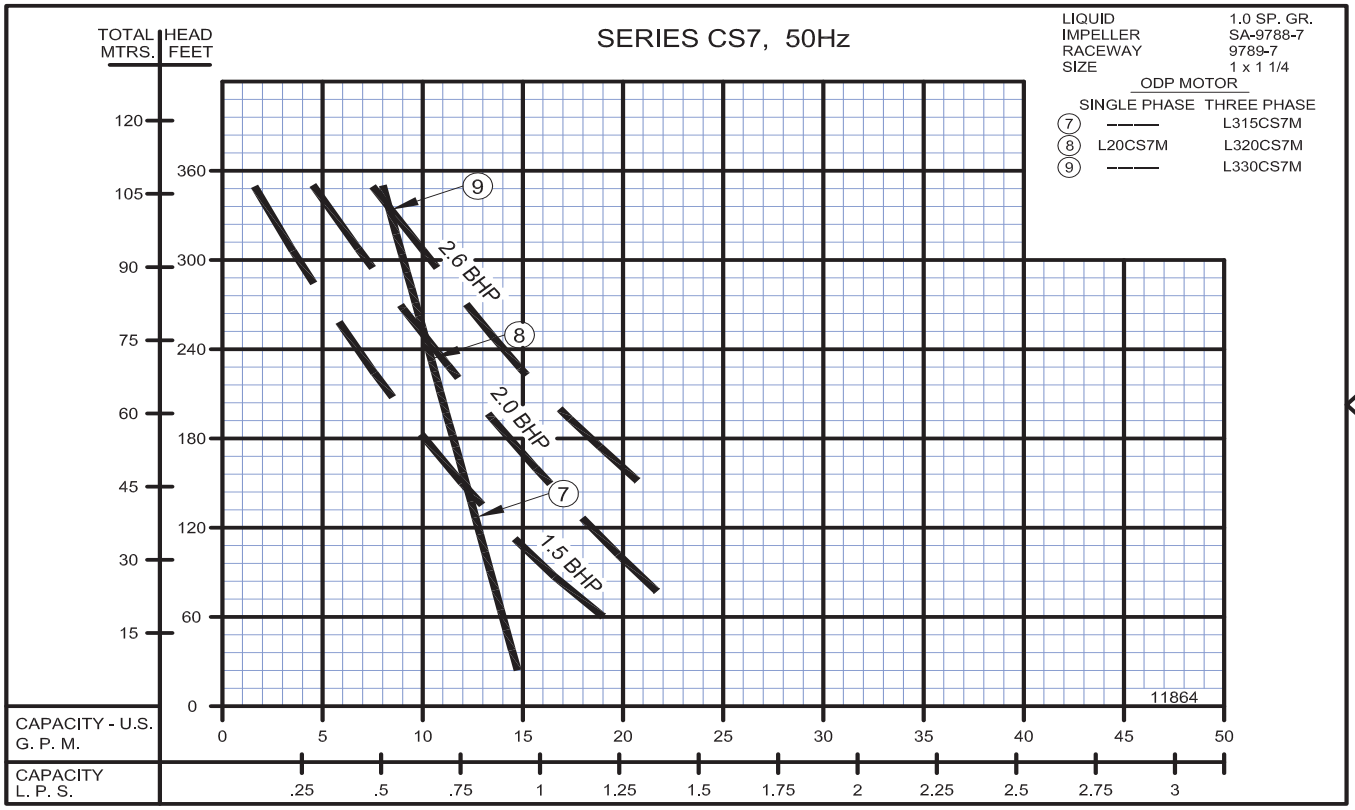

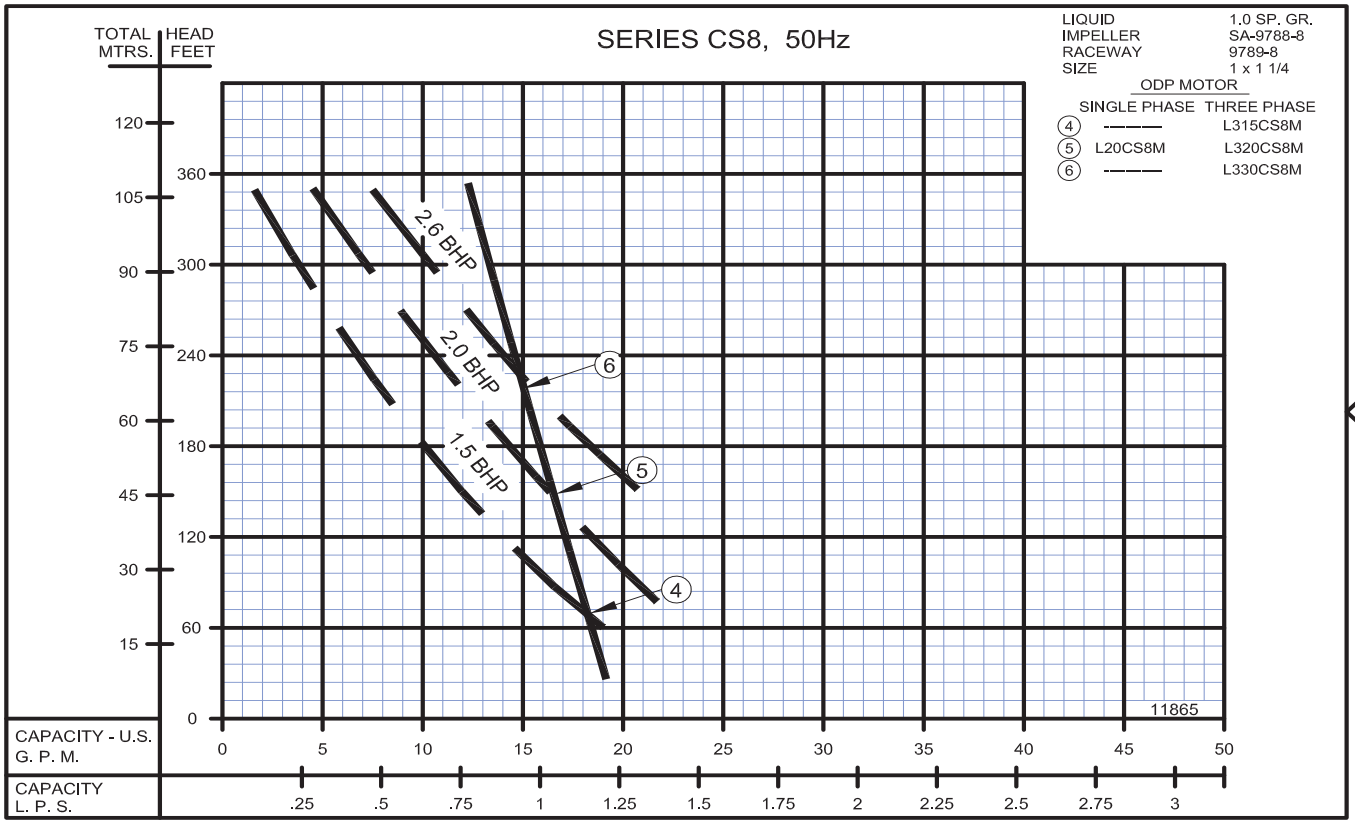

Turbines - Close Coupled

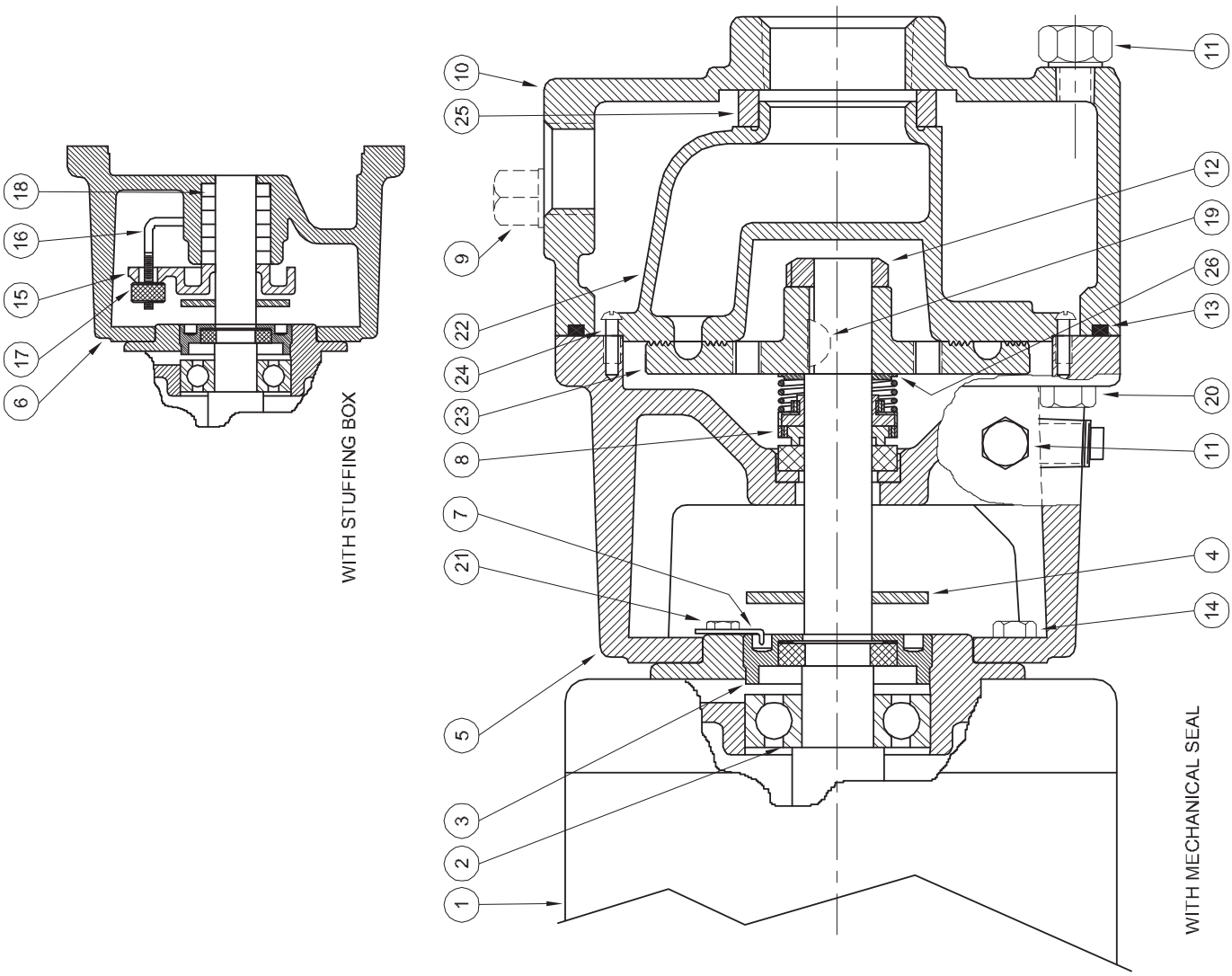

1 - MOTORS		
RPM & PHASE	PART NUMBER	HP
1725RPM - OPEN DRIP PROOF		
1725 RPM Single Phase (ODP)	09797 09799	1/3 1/2
1725 RPM Three Phase (ODP)	09798 09800	1/3 1/2
3450RPM - OPEN DRIP PROOF		
3450 RPM Single Phase (ODP)	09805 09807 09809	1 1½ 2
3450 RPM Three Phase (ODP)	09806 09808 09810 09812 09855	1 1½ 2 3 5
3450RPM - TOTALLY ENCLOSED		
3450 RPM Three Phase (TEFC)	09824 09845 09846	1½ 2 3

SYMBOL NUMBER	PART NUMBER	QTY	DESCRIPTION
2	09144	1	Ball Bearing - Pump End
	05290	1	Ball Bearing - Switch End (Not Shown)
3	04206-A	1	Screw, Impeller Adjusting
4	08324	1	Slinger Washer
5	09787	1	Frame (for mechanical seal)
	09787-C	1	Frame (for mechanical seal)
6	09792	1	Frame (for stuffing box)
7	07576	1	Adjusting Screw Lock
	07576-S	1	Adjusting Screw Lock
	08991	1	Mechanical Seal - Buna-N
8	09813-C	1	Mechanical Seal - Viton
	21934	1	Mechanical Seal - EPT
9	02953	1	Plug, 1/2"
	02953-B	1	Plug, 1/2"
10	09790-B	1	Case
	09790-E	1	Case
11	04236	3	Plug, 1/4-18 NPT
12	01404	1	Impeller Lock Nut
	01404-A	1	Impeller Lock Nut
	09791	1	O-Ring Gasket - Buna-N
13	09817	1	O-Ring Gasket - Viton
	22135	1	O-Ring Gasket - EPT
	22104	1	O-Ring Gasket - Teflon
14	03121	4	Screw, 1/4" x 3/4"
	1-523-1	4	Screw, 1/4" x 3/4"
15	05812-B	1	Gland, Stuffing Box
16	07003	2	Gland Bolt
17	04211	2	Gland Nut
18	05468	5	Packing
19	01457	1	Key, Woodruff (As Shown - Repair Kits Only)
	21748-A	1	Key, Square
20	01931	4	Screw, 7/16-14 x 1¼" Lg
	1-149-1	4	Screw, 7/16-14 x 1¼" Lg
21	07577	1	Screw, #10 x 3/8" Lg

SYMBOL NUMBER	PART NUMBER	QTY	DESCRIPTION
	09789-5	1	Raceway for CS5M
	09789-5-A	1	Raceway for CS5M
	09789-6	1	Raceway for CS6M
22	09789-7	1	Raceway for CS7M
	09789-8	1	Raceway for CS8M
	09789-9	1	Raceway for CS9M
	09789-9-A	1	Raceway for CS9M
	SA09788-5	1	Impeller for CS5M
	SA09788-5-A	1	Impeller for CS5M
	SA09788-6	1	Impeller for CS6M
* 23	SA09788-7	1	Impeller for CS7M
	SA09788-HT-8	1	Impeller for CS8M
	SA09788-HT-9	1	Impeller for CS9M
	SA09788-HT-9-A	1	Impeller for CS9M
24	02535	2	Screw, Raceway to Frame
25	04231	1	Suction Sleeve - Buna-N (Std)
	09695	1	Suction Sleeve - Viton
	20285	1	Suction Sleeve - EPT
26	7441-A	1	Back-up Washer for CS5M ONLY
DIFFERING PARTS FOR ALL BRONZE CONSTRUCTION			
5	09787-A	1	Frame (for mechanical seal)
6	09792-A	1	Frame (for stuffing box)
10	09790-C	1	Case
	09790-E	1	Case
14	03121-B	4	Screw, 1/4-20 x 3/4" Lg
20	08771	4	Screw, 7/16-14 x 1¼" Lg - SS

(*) Standard impellers are suitable for fluid temperatures to 250°F (121°C). For higher temperatures, add the designation "HT" to impeller part number. This includes all "MJ" Jacketed Seal Pumps. EXAMPLE: SA09788-HT-5

NOTE 1: Impeller and raceway must be ordered as a repair kit. NOT available individually.

REPAIR KITS FOR CS SERIES PUMPS									
REPAIR KIT PN (Std Buna-N)	**MODEL**	**REPAIR KIT PN (Viton)**	**MODEL**	**REPAIR KIT PN (EPT)**	**MODEL**	**REPAIR KIT PN (High Temp)**	**MODEL**	**REPAIR KIT PN (High Temp with Cooling Jacket)**	**MODEL**
20522-5	CS5M	20522-5-MV	CS5MV	20522-5-ME	CS5ME	20522-HT-5	CS5MV-HT	20522-5-MJ	CS5MJ
20522-6	CS6M	20522-6-MV	CS6MV	20522-6-ME	CS6ME	20522-HT-6	CS6MV-HT	20522-6-MJ	CS6MJ
20522-7	CS7M	20522-7-MV	CS7MV	20522-7-ME	CS7ME	20522-HT-7	CS7MV-HT	20522-7-MJ	CS7MJ
20522-8	CS8M	20522-8-MV	CS8MV	20522-8-ME	CS8ME	20522-HT-8	CS8MV-HT	20522-8-MJ	CS8MJ
20522-9	CS9M	20522-9-MV	CS9MV	20522-9-ME	CS9ME	20522-HT-9	CS9MV-HT	20522-9-MJ	CS9MJ
KIT INCLUDES: Impeller, Raceway and Screws, Shaft Seal, Suction Sleeve, Impeller Locknut and Key, and Instructions.									

WARNING:
CANCER AND REPRODUCTIVE HARM -
WWW.P65WARNINGS.CA.GOV