Burks Pumps T320CS7M-AB
www.PumpAgents.com - Click here for Pricing/Ordering for Pumps and Parts



## *Close Coupled Regenerative Turbine*

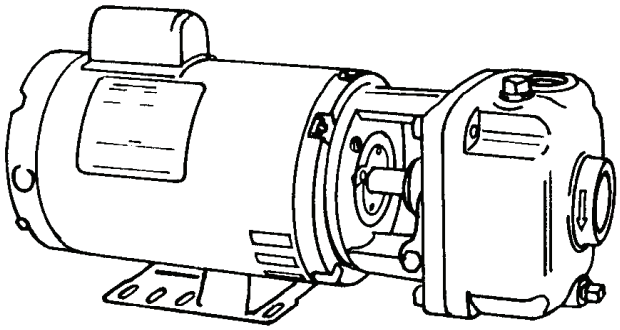

## 4CS - 1725 RPM - 60Hz.
## CS - 3450 RPM - 60Hz.

(See Indivdual curves for symbol number)

| *MAXIMUM HEAD | | | |
|---|---|---|---|
| Symbol Number | HP | Catalog Number | |
| | | 1 - Phase | 3 - Phase |
| 1 | 1/3 | 34CS5M | 334CS5M |
| 2 | 1/3 | 34CS6M | 334CS6M |
| 3 | 1/2 | 54CS6M | 354CS6M |
| 4 | 1/3 | 34CS7M | 334CS7M |
| 5 | 1/2 | 54CS7M | 354CS7M |
| 6 | 1/2 | 54CS8M | 354CS8M |
| 7 | 1 | 10CS5M | 310CS5M |
| 8 | 1½ | 15CS5M | 315CS5M |
| 9 | 1 | 10CS6M | 310CS6M |
| 10 | 1½ | 15CS6M | 315CS6M |
| 11 | 2 | 20CS6M | 320CS6M |
| 12 | 1½ | 15CS7M | 315CS7M |
| 13 | 2 | 20CS7M | 320CS7M |
| 14 | 3 | ---- | 330CS7M |
| 15 | 2 | 20CS8M | 320CS8M |
| 16 | 3 | ---- | 330CS8M |
| 17 | 5 | ---- | 350CS8M |
| 18 | 3 | ---- | 330CS9M |
| 19 | 5 | ---- | 350CS9M |

(*) For Standard Pumps with ODP motors

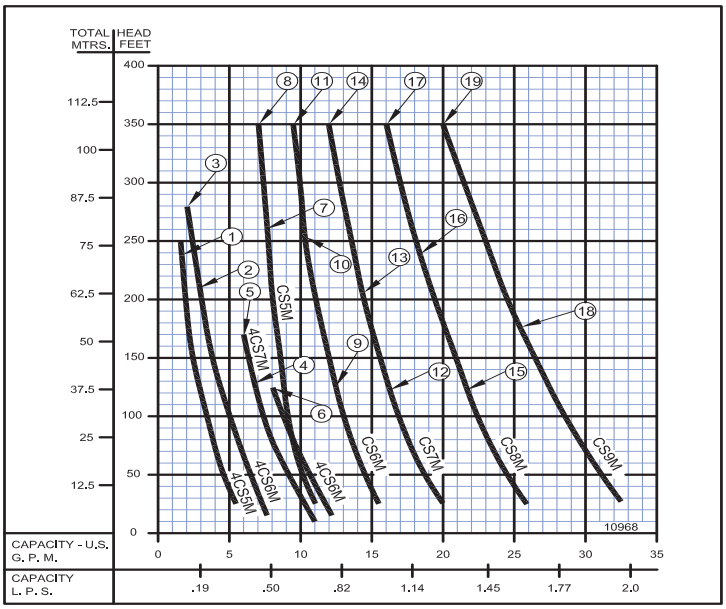


## CS - 2900 RPM - 50Hz.

(See Indivdual curves for symbol number)

| MAXIMUM HEAD | | |
|---|---|---|
| Symbol Number | HP | Catalog Number |
| * 1 | 2.0 | L320CS9M |
| 2 | 2.6 | L330CS9M |
| 3 | 4.0 | L340CS9M |
| 4 | 1.5 | L315CS8M |
| * 5 | 2.0 | L320CS8M |
| 6 | 2.6 | L330CS8M |
| 7 | 1.5 | L315CS7M |
| * 8 | 2.0 | L320CS7M |
| 9 | 2.6 | L330CS7M |
| 10 | 1.0 | L310CS6M |
| 11 | 1.5 | L315CS6M |
| * 12 | 2.0 | L320CS6M |
| 13 | 1.0 | L310CS5M |
| 14 | 1.0 | L315CS5M |

(*) Pump numbers 1, 5, 8 & 12 are the only pump available in single phase 115/230 volt.
All of the pumps above are available with stuffing box.

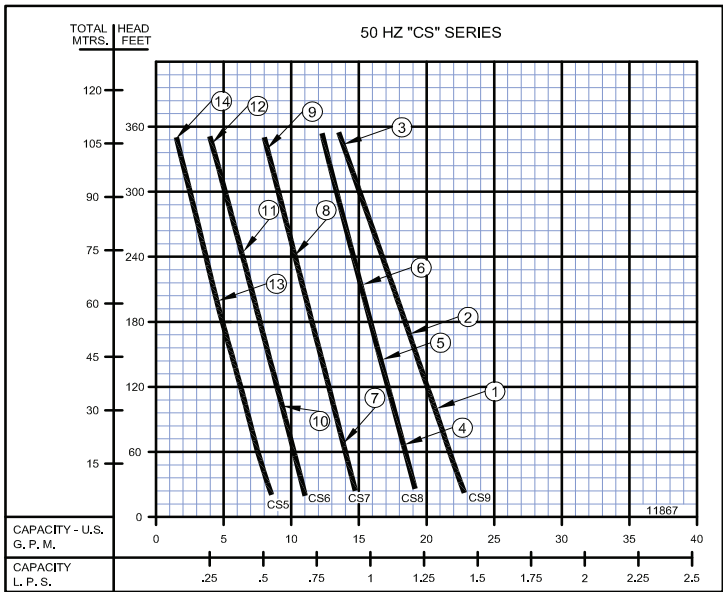

Burks Pumps T320CS7M-AB
www.PumpAgents.com - Click here for Pricing/Ordering for Pumps and Parts



## *Close Coupled Regenerative Turbine*

**60 HZ - PERFORMANCE & SELECTION CHART**

| Catalog Number | | HP | Tappings | | PSI Feet | TOTAL HEAD | | | | | | | | | | | | | |
|---|---|---|---|---|---|---|---|---|---|---|---|---|---|---|---|---|---|---|---|
| | | | Suct. NPT | Disc. NPT | | 8.6<br>20 | 17.2<br>40 | 26<br>60 | 43.3<br>100 | 54.1<br>125 | 64.9<br>150 | 75.8<br>175 | 86.6<br>200 | 97.4<br>225 | 108.3<br>250 | 119.1<br>275 | 130<br>300 | 140.1<br>325 | 151.6<br>350 |
| 1 Phase | 3 Phase | | | | | CAPACITY IN GPM | | | | | | | | | | | | | |
| 34CS5M | 334CS5M | 1/3 | 1¼ | 1 | | 5.8 | 4.9 | 4.3 | 3.3 | 2.8 | 2.4 | 2.1 | 1.8 | 1.6 | | | | | |
| 34CS6M | 334CS6M | 1/3 | | | | 7.8 | 6.9 | 6.3 | 5.2 | 4.6 | 4.1 | 3.7 | 3.3 | | | | | | |
| 54CS6M | 354CS6M | 1/2 | | | | 7.8 | 6.9 | 6.3 | 5.2 | 4.6 | 4.1 | 3.7 | 3.3 | 2.9 | 2.6 | 2.3 | | | |
| 34CS7M | 334CS7M | 1/3 | | | | 10.4 | 9.4 | 8.5 | 7.2 | 6.5 | | | | | | | | | |
| 54CS7M | 354CS7M | 1/2 | | | | 10.4 | 9.4 | 8.5 | 7.2 | 6.5 | 5.9 | 5.4 | | | | | | | |
| 54CS8M | 354CS8M | 1/2 | | | | 12.2 | 11.3 | 10.4 | 9.0 | 8.2 | | | | | | | | | |
| 10CS5M | 310CS5M | 1 | 1¼ | 1 | | 11 | 10.6 | 10.1 | 9.3 | 9 | 8.5 | 8.2 | 8 | 7.7 | | | | | |
| 15CS5M | 315CS5M | 1½ | | | | 11 | 10.6 | 10.1 | 9.3 | 9 | 8.5 | 8.2 | 8 | 7.7 | 7.5 | 7.4 | 7.2 | 7.1 | |
| 10CS6M | 310CS6M | 1 | | | | 16 | 15.2 | 14.5 | 13.5 | 12.8 | | | | | | | | | |
| 15CS6M | 315CS6M | 1½ | | | | 16 | 15.2 | 14.5 | 13.5 | 12.8 | 12.4 | 12 | 11.5 | 11 | 10.7 | | | | |
| 20CS6M | 320CS6M | 2 | | | | 16 | 15.2 | 14.5 | 13.5 | 12.8 | 12.4 | 12 | 11.5 | 11 | 10.7 | 10.5 | 10.1 | 9.7 | 9.5* |
| 15CS7M | 315CS7M | 1½ | | | | 20.5 | 19.6 | 19.5 | 17.3 | | | | | | | | | | |
| 20CS7M | 320CS7M | 2 | | | | 20.5 | 19.6 | 19.5 | 17.3 | 16.5 | 16 | 15.3 | 14.7 | | | | | | |
| ---- | 330CS7M | 3 | | | | 20.5 | 19.6 | 19.5 | 17.3 | 16.5 | 16 | 15.3 | 14.7 | 14.2 | 13.7 | 13.3 | 12.8 | 12.5 | 12* |
| 20CS8M | 320CS8M | 2 | | | | 26.5 | 25.5 | 24.6 | 23 | 22 | | | | | | | | | |
| ---- | 330CS8M | 3 | | | | 26.5 | 25.5 | 24.6 | 23 | 22 | 21.3 | 20.5 | 19.8 | 19.2 | | | | | |
| ---- | 350CS8M | 5 | | | | 26.5 | 25.5 | 24.6 | 23 | 22 | 21.3 | 20.5 | 19.8 | 19.2 | 18.5 | 18 | 17.4 | 16.8 | 16.3* |
| ---- | 330CS9M | 3 | | | | 32.5 | 31.5 | 30.5 | 28.6 | 27.5 | 26.5 | | | | | | | | |
| ---- | 350CS9M | 5 | | | | 32.5 | 31.5 | 30.5 | 28.6 | 27.5 | 26.5 | 25.6 | 24.7 | 23.8 | 23 | 22.2 | 21.5 | 20.7 | 20* |

1750 RPM

3450 RPM

* Rated to 358 ft (155 psi) per performance curve.

**60 HZ - PERFORMANCE & SELECTION CHART**

| Catalog Number | | HP | Tappings | | kPa Meters | TOTAL HEAD | | | | | | | | | | | | | |
|---|---|---|---|---|---|---|---|---|---|---|---|---|---|---|---|---|---|---|---|
| | | | Suct. NPT (in) | Disc. NPT (in) | | 59<br>6.1 | 119<br>12.1 | 179<br>18.2 | 299<br>30.5 | 373<br>38.1 | 447<br>45.7 | 523<br>53.3 | 597<br>61 | 672<br>68.6 | 747<br>76.2 | 821<br>83.8 | 896<br>91.4 | 966<br>99.1 | 1045<br>106.6 |
| 1 Phase | 3 Phase | | | | | CAPACITY IN LPS | | | | | | | | | | | | | |
| 34CS5M | 334CS5M | 1/3 | 1¼ | 1 | | 0.36 | 0.30 | 0.27 | 0.20 | 0.17 | 0.15 | 0.13 | 0.11 | 1.6 | | | | | |
| 34CS6M | 334CS6M | 1/3 | | | | 0.49 | 0.43 | 0.39 | 0.32 | 0.29 | 0.25 | 0.23 | 0.20 | | | | | | |
| 54CS6M | 354CS6M | 1/2 | | | | 0.49 | 0.43 | 0.39 | 0.32 | 0.29 | 0.25 | 0.23 | 0.20 | 0.18 | 0.16 | 0.14 | | | |
| 34CS7M | 334CS7M | 1/3 | | | | 0.65 | 0.59 | 0.53 | 0.45 | 0.41 | | | | | | | | | |
| 54CS7M | 354CS7M | 1/2 | | | | 0.65 | 0.59 | 0.53 | 0.45 | 0.41 | 0.37 | 0.34 | | | | | | | |
| 54CS8M | 354CS8M | 1/2 | | | | 0.76 | 0.71 | 0.65 | 0.56 | 0.51 | | | | | | | | | |
| 10CS5M | 310CS5M | 1 | 1¼ | 1 | | 0.69 | 0.66 | 0.63 | 0.58 | 0.56 | 0.53 | 0.51 | 0.50 | 0.48 | | | | | |
| 15CS5M | 315CS5M | 1½ | | | | 0.69 | 0.66 | 0.63 | 0.58 | 0.56 | 0.53 | 0.51 | 0.50 | 0.48 | 0.47 | 0.46 | 0.45 | 0.44 | |
| 10CS6M | 310CS6M | 1 | | | | 1.00 | 0.95 | 0.91 | 0.85 | 0.80 | | | | | | | | | |
| 15CS6M | 315CS6M | 1½ | | | | 1.00 | 0.95 | 0.91 | 0.85 | 0.80 | 0.78 | 0.75 | 0.72 | 0.69 | 0.67 | | | | |
| 20CS6M | 320CS6M | 2 | | | | 1.00 | 0.95 | 0.91 | 0.85 | 0.80 | 0.78 | 0.75 | 0.72 | 0.69 | 0.67 | 0.66 | 0.63 | 0.61 | 0.59 |
| 15CS7M | 315CS7M | 1½ | | | | 1.29 | 1.24 | 1.23 | 1.09 | | | | | | | | | | |
| 20CS7M | 320CS7M | 2 | | | | 1.29 | 1.24 | 1.23 | 1.09 | 1.04 | 1.00 | 0.96 | 0.92 | | | | | | |
| ---- | 330CS7M | 3 | | | | 1.29 | 1.24 | 1.23 | 1.09 | 1.04 | 1.00 | 0.96 | 0.92 | 0.89 | 0.86 | 0.83 | 0.80 | 0.78 | 0.75 |
| 20CS8M | 320CS8M | 2 | | | | 1.67 | 1.60 | 1.55 | 1.45 | 1.38 | | | | | | | | | |
| ---- | 330CS8M | 3 | | | | 1.67 | 1.60 | 1.55 | 1.45 | 1.38 | 1.34 | 1.29 | 1.24 | 1.21 | | | | | |
| ---- | 350CS8M | 5 | | | | 1.67 | 1.60 | 1.55 | 1.45 | 1.38 | 1.34 | 1.29 | 1.24 | 1.21 | 1.16 | 1.13 | 1.09 | 1.05 | 1.02 |
| ---- | 330CS9M | 3 | | | | 2.05 | 1.98 | 1.92 | 1.80 | 1.73 | 1.67 | | | | | | | | |
| ---- | 350CS9M | 5 | | | | 2.05 | 1.98 | 1.92 | 1.80 | 1.73 | 1.67 | 1.61 | 1.55 | 1.50 | 1.45 | 1.40 | 1.35 | 1.30 | 1.26 |

1750 RPM

3450 RPM

**NOTE:** When pumping hot water over 180ºF (82.2ºC), check the NPSH available in the pumping system against the required pump NPSH shown on pump performance curves. Available NPSH must be greater than required NPSH.



PumpAgents.com
Wholesale Pump Agents

Burks Pumps T320CS7M-AB
www.PumpAgents.com - Click here for Pricing/Ordering for Pumps and Parts



## *Close Coupled Regenerative Turbine*

**50 HZ - PERFORMANCE & SELECTION CHART**

| Catalog Number | | HP | Tappings | | PSI Feet | TOTAL HEAD | | | | | | | | | | | | | |
|---|---|---|---|---|---|---|---|---|---|---|---|---|---|---|---|---|---|---|---|
| | | | Suct. NPT | Disc. NPT | | 8.6<br>20 | 17.2<br>40 | 26<br>60 | 43.3<br>100 | 54.1<br>125 | 64.9<br>150 | 75.8<br>175 | 86.6<br>200 | 97.4<br>225 | 108.3<br>250 | 119.1<br>275 | 130<br>300 | 140.1<br>325 | 151.6<br>350 |
| 1 Phase | 3 Phase | | | | | CAPACITY IN GPM | | | | | | | | | | | | | |
| | L310CS5M<br>L315CS5M | 1<br>1.5 | | | | 8.5<br>8.5 | 8.0<br>8.0 | 7.5<br>7.5 | 6.5<br>6.5 | 6.0<br>6.0 | 5.5<br>5.5 | 5.0<br>5.0 | 4.5<br>4.5 | 4.0 | 3.5 | 3.0 | 2.5 | 2.0 | 1.5* |
| | L310CS6M<br>L315CS6M | 1<br>1.5 | | | | 11.0<br>11.0 | 10.5<br>10.5 | 10.0<br>10.0 | 9.3<br>9.3 | 9.0 | 8.3 | 7.8 | 7.3 | 6.8 | 6.3 | | | | |
| L20CS6M | L320CS6M | 2 | | | | 11.0 | 10.5 | 10.0 | 9.3 | 9.0 | 8.3 | 7.8 | 7.3 | 6.8 | 6.3 | 5.8 | 5.0 | 4.5 | 4.0* |
| | L315CS7M<br>L330CS7M | 1.5<br>2.6 | | | | 14.8<br>14.8 | 14.3<br>14.3 | 14.0<br>14.0 | 13.0<br>13.0 | 12.8<br>12.8 | 12.0 | 11.6 | 11.0 | 10.5 | 10.0 | 9.5 | 9.0 | 8.5 | 8.0* |
| L20CS7M | L320CS7M | 2 | 1¼ | 1 | | 14.8 | 14.3 | 14.0 | 13.0 | 12.8 | 12.0 | 11.6 | 11.0 | 10.5 | | | | | |
| | L315CS8M<br>L330CS8M | 1.5<br>2.6 | | | | 19.0<br>19.0 | 18.8<br>18.8 | 18.3<br>18.3 | 17.5 | 17.0 | 16.5 | 16.0 | 15.5 | 15.0 | 14.5 | 14.0 | 13.3 | 13.0 | 12.3* |
| L20CS8M | L320CS8M | 2 | | | | 19.0 | 18.8 | 18.3 | 17.5 | 17.0 | 16.5 | | | | | | | | |
| L20CS9M | L320CS9M | 2 | | | | 22.8 | 22.3 | 21.8 | 20.5 | | | | | | | | | | |
| ----<br>---- | L330CS9M<br>L340CS9M | 2.6<br>4.0 | | | | 22.8<br>22.8 | 22.3<br>22.3 | 21.8<br>21.8 | 20.5<br>20.5 | 20.0<br>20.0 | 19.3<br>19.3 | 18.8<br>18.8 | 18.0 | 17.0 | 16.5 | 15.8 | 15.0 | 14.3 | 13.5* |

2900 RPM

* Rated to 358 ft (155 psi) per performance curve.

**50 HZ - PERFORMANCE & SELECTION CHART**

| Catalog Number | | HP | Tappings | | kPa Meters | TOTAL HEAD | | | | | | | | | | | | | |
|---|---|---|---|---|---|---|---|---|---|---|---|---|---|---|---|---|---|---|---|
| | | | Suct. NPT (in) | Disc. NPT (in) | | 59<br>6.1 | 119<br>12.1 | 179<br>18.2 | 299<br>30.5 | 373<br>38.1 | 447<br>45.7 | 523<br>53.3 | 597<br>61 | 672<br>68.6 | 747<br>76.2 | 821<br>83.8 | 896<br>91.4 | 966<br>99.1 | 1045<br>106.6 |
| 1 Phase | 3 Phase | | | | | CAPACITY IN LPS | | | | | | | | | | | | | |
| | L310CS5M<br>L315CS5M | 1<br>1.5 | | | | 0.54<br>0.54 | 0.50<br>0.50 | 0.47<br>0.47 | 0.41<br>0.41 | 0.38<br>0.38 | 0.35<br>0.35 | 0.32<br>0.32 | 0.28<br>0.28 | 0.25 | 0.22 | 0.19 | 0.16 | 0.13 | 0.09 |
| | L310CS6M<br>L315CS6M | 1<br>1.5 | | | | 0.69<br>0.69 | 0.66<br>0.66 | 0.63<br>0.63 | 0.58<br>0.58 | 0.56 | 0.52 | 0.49 | 0.46 | 0.42 | 0.39 | | | | |
| L20CS6M | L320CS6M | 2 | | | | 0.69 | 0.66 | 0.63 | 0.58 | 0.56 | 0.52 | 0.49 | 0.46 | 0.42 | 0.39 | 0.36 | 0.31 | 0.28 | 0.25 |
| | L315CS7M<br>L330CS7M | 1.5<br>2.6 | | | | 0.93<br>0.93 | 0.90<br>0.90 | 0.88<br>0.88 | 0.82<br>0.82 | 0.80<br>0.80 | 0.75 | 0.73 | 0.69 | 0.66 | 0.63 | 0.59 | 0.56 | 0.53 | 0.50 |
| L20CS7M | L320CS7M | 2 | 1¼ | 1 | | 0.93 | 0.90 | 0.88 | 0.82 | 0.80 | 0.75 | 0.73 | 0.69 | 0.66 | | | | | |
| | L315CS8M<br>L330CS8M | 1.5<br>2.6 | | | | 1.19<br>1.19 | 1.18<br>1.18 | 1.15<br>1.15 | 1.10 | 1.07 | 1.04 | 1.00 | 0.97 | 0.94 | 0.91 | 0.88 | 0.83 | 0.82 | 0.77 |
| L20CS8M | L320CS8M | 2 | | | | 1.19 | 1.18 | 1.15 | 1.10 | 1.07 | 1.04 | | | | | | | | |
| L20CS9M | L320CS9M | 2 | | | | 1.43 | 1.40 | 1.37 | 1.29 | | | | | | | | | | |
| | L330CS9M<br>L340CS9M | 2.6<br>4.0 | | | | 1.43<br>1.43 | 1.40<br>1.40 | 1.37<br>1.37 | 1.29<br>1.29 | 1.26<br>1.26 | 1.21<br>1.21 | 1.18<br>1.18 | 1.13 | 1.07 | 1.04 | 0.99 | 0.94 | 0.90 | 0.85 |

2900 RPM

**NOTE:** When pumping hot water over 180ºF (82.2ºC), check the NPSH available in the pumping system against the required pump NPSH shown on pump performance curves. Available NPSH must be greater than required NPSH.

## *Close Coupled Regenerative Turbine*

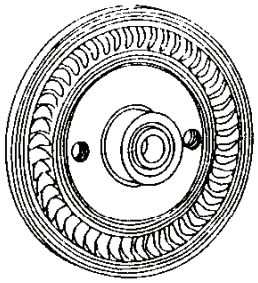

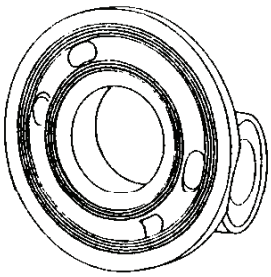

BURKS exclusive unique regenerative type turbine pumps are designed to handle clear water and many other non-abrasive, lower viscosity liquids on high pressure, low capacity applications with the greatest possible efficiency.

BURKS is the only turbine pump with Life-Lok ® External Impeller Adjustment feature that allows readjustment of impeller without disturbing piping, disassembling pump or replacing parts. Gives up to 40% longer service life than turbine pumps of other designs.

- Self-Priming
- Compact, Space-saving size
- No coupling - eliminates misalignment problemts
- Dependable carbon/ceramic mechanical shaft seal for temperatures to 225°F (107°C).
- Bronze impeller with Monel blades - the only moving part
- Bronze raceway with cast-in vortex pockets - will not vapor lock
- #303 Stainless Steel pump shaft
- Easy to service
- Every pump factory tested
- Available Bronze fitted, All Bronze, Stainless Steel

**WARNING:**
CANCER AND REPRODUCTIVE HARM -
WWW.P65WARNINGS.CA.GOV

| MAXIMUM OPERATING CONDITIONS | |
|---|---|
| TEMPERATURE (For Standard Buna-N Seal) | 225ºF (107ºC) |
| INLET PRESSURE | 100 PSI (689kPa) |
| CASING WORKING PRESSURE | 250 PSI (1723kPa) |

**MOTOR INFORMATION**

4CS Series:
Single Phase motors are 115/208-230 Volt, 60Hz, 1750RPM
Three Phase motors are 208-230/460 Volts, 60/50Hz, 1750/1450RPM

CS Series:
Single Phase motors are 115/208-230 Volt, 60 Hz, 3450RPM
Three Phase 1, 11/2 & 2HP. - 208-230/460 Volt, 60/50 Hz., 3450/2900 RPM
Three Phase 3 & 5 HP - 208-230/460 Volt, 60 Hz, 3450RPM

Standard pump motors have open drip proof construction and are rated with jet pump service factors for continuous duty operation at all ratings shown.
Single phase motors are capacitor start/induction run with buit-in overload protection.
Three phase motors require a magnetic type starter which provides full 3-leg overload protection. Failure to use the correct starter and overloads will void the warranty.

**FOR TEMPERATURES TO 500°F (260°C).**

Series CS Pumps are available in a Jacketed Seal Cavity design for pumping hot oil, hot water and heat transfer fluids in common use in high temperature heating or cooling applications. This feature greatly extends seal life in high temperature applications. To order, add suffix “J” to pump catalog number for temperatures below 400°F (204°C) and add suffix “JK” to pump catalog number for temperatures over 400°F (204°). Example: 15CS5MJ. See Section on High Temperature Pumps for more information.

| MATERIALS OF CONSTRUCTION | | | |
|---|---|---|---|
| **PART** | **BRONZE FITTED** | **ALL BRONZE** | **STAINLESS STEEL** |
| Frame | Cast Iron | Bronze | #316 Stainless |
| Case | Cast Iron | Bronze | #316 Stainless |
| Impeller | Bronze (Monel Blades) | Bronze (Monel Blades) | #303 Stainless |
| Raceway | Bronze | Bronze | #303 Stainless |
| Shaft | #303 Stainless | #303 Stainless | #303 Stainless |
| Shaft Seal | Carbon-Ceramic SS - Buna-N | Carbon-Ceramic SS - Buna-N | Carbon-Ceramic SS - Buna-N |

Burks Pumps T320CS7M-AB
www.PumpAgents.com - Click here for Pricing/Ordering for Pumps and Parts



## *Close Coupled Regenerative Turbine*

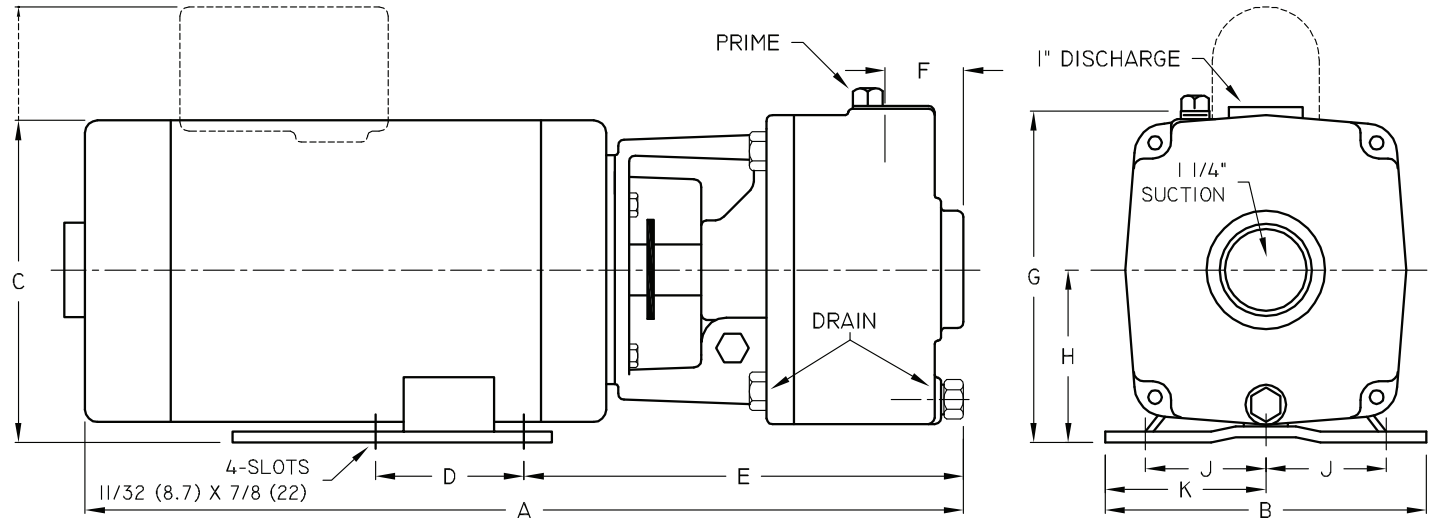


**DIMENSIONS IN INCHES - ODP**

| Series | HP | Tappings | | 1 PH A | 1 PH A (S.S.) | 3 PH A | 3 PH A (S.S.) | B | 1 PH C | 3 PH C | D | E | E (S.S.) | F | F (S.S.) | G | H | J | K |
|---|---|---|---|---|---|---|---|---|---|---|---|---|---|---|---|---|---|---|---|
| | | Disc. NPT (in) | Suct. NPT (in) | | | | | | | | | | | | | | | | |
| 4CS | 1/3 | 1 | 1¼ | 17⅝ | 18 1/16 | 16⅜ | 16 13/16 | 6½ | 6⅝ | 6⅝ | 3 | 9 | 9 7/16 | 1¾ | 1¾ | 6¾ | 3½ | 2 7/16 | 3¼ |
| | 1/2 | 1 | 1¼ | 17⅝ | 18 1/16 | 16⅝ | 16 13/16 | 6½ | 6⅝ | 6⅝ | 3 | 9 | 9 7/16 | 1¾ | 1¾ | 6¾ | 3½ | 2 7/16 | 3¼ |
| CS | 1 | 1 | 1¼ | 18 5/16 | 18¾ | 18 5/16 | 18¾ | 6½ | 6⅝ | 6⅝ | 3 | 9 | 9 7/16 | 1¾ | 1¾ | 6¾ | 3½ | 2 7/16 | 3¼ |
| | 1½ | 1 | 1¼ | 19 1/16 | 19½ | 19 1/16 | 19½ | 6½ | 8 13/16 | 6⅝ | 3 | 9 | 9 7/16 | 1¾ | 1¾ | 6¾ | 3½ | 2 7/16 | 3¼ |
| | 2 | 1 | 1¼ | 19 9/16 | 20 | 19 1/16 | 19½ | 6½ | 8 13/16 | 6⅝ | 3 | 9 | 9 7/16 | 1¾ | 1¾ | 6¾ | 3½ | 2 7/16 | 3¼ |
| | 3 | 1 | 1¼ | --- | --- | 19 9/16 | 20 | 6½ | --- | 6⅝ | 3 | 9 | 9 7/16 | 1¾ | 1¾ | 6¾ | 3½ | 2 7/16 | 3¼ |
| | 5 | 1 | 1¼ | --- | --- | 20 15/16 | 21⅜ | 6½ | --- | 6⅝ | 3 | 9 | 9 7/16 | 1¾ | 1¾ | 6¾ | 3½ | 2 7/16 | 3¼ |

**DIMENSIONS IN INCHES - TEFC**

| Series | HP | Tappings | | 1 PH A | 1 PH A (S.S.) | 3 PH A | 3 PH A (S.S.) | B | 1 PH C | 3 PH C | D | E | E (S.S.) | F | F (S.S.) | G | H | J | K |
|---|---|---|---|---|---|---|---|---|---|---|---|---|---|---|---|---|---|---|---|
| | | Disc. NPT (in) | Suct. NPT (in) | | | | | | | | | | | | | | | | |
| CS | 1½ | 1 | 1¼ | --- | --- | 18½ | 19⅛ | 6½ | --- | 6⅝ | 3 | 9 | 9 7/16 | 1¾ | 1¾ | 6¾ | 3½ | 2 7/16 | 3¼ |
| | 2 | 1 | 1¼ | --- | --- | 18½ | 19⅛ | 6½ | --- | 6⅝ | 3 | 9 | 9 7/16 | 1¾ | 1¾ | 6¾ | 3½ | 2 7/16 | 3¼ |
| | 3 | 1 | 1¼ | --- | --- | 20¾ | 21⅜ | 6½ | --- | 6⅝ | 3 | 9 | 9 7/16 | 1¾ | 1¾ | 6¾ | 3½ | 2 7/16 | 3¼ |
| | 5 | 1 | 1¼ | --- | --- | 20⅝ | 21¼ | 6½ | --- | 6⅝ | 3 | 9 | 9 7/16 | 1¾ | 1¾ | 6¾ | 3½ | 2 7/16 | 3¼ |

PumpAgents.com
Wholesale Pump Agents

***A strainer, approximately 20 mesh, should be installed on the suction side of the pump to prevent chips, scale or hard foreign particales from entering the pump and damaging the raceway and impeller.***

## *Close Coupled Regenerative Turbine*

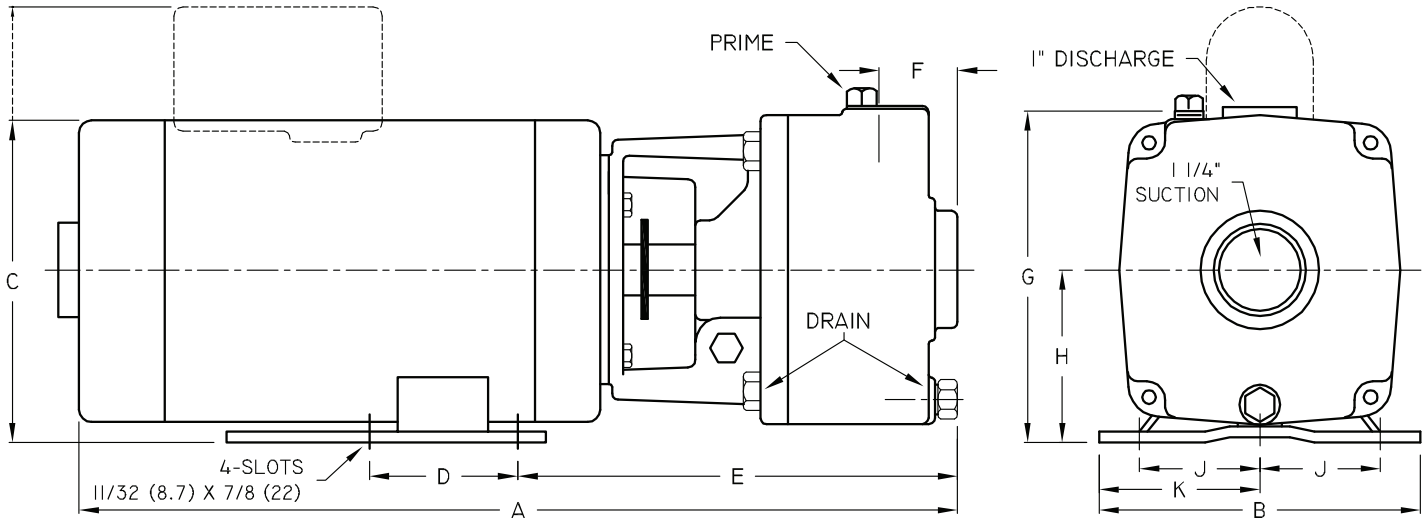


| Series | HP | Tappings | | DIMENSIONS IN MILLIMETERS - ODP | | | | | | | | | | | | | | | |
|---|---|---|---|---|---|---|---|---|---|---|---|---|---|---|---|---|---|---|---|
| | | Disc. NPT (in) | Suct. NPT (in) | 1 PH A | 1 PH A (S.S. | 3 PH A | 3 PH A (S.S.) | B | 1 PH C | 3 PH C | D | E | E (S.S.) | F | F (S.S.) | G | H | J | K |
| 4CS | 1/3 | 1 | 1¼ | 447 | 459 | 415 | 427 | 165 | 168 | 168 | 76 | 228 | 240 | 44 | 44 | 171 | 89 | 62 | 82 |
| | 1/2 | 1 | 1¼ | 447 | 459 | 422 | 427 | 165 | 168 | 168 | 76 | 228 | 240 | 44 | 44 | 171 | 89 | 62 | 82 |
| CS | 1 | 1 | 1¼ | 465 | 476 | 465 | 476 | 165 | 168 | 168 | 76 | 228 | 240 | 44 | 44 | 171 | 89 | 62 | 82 |
| | 1½ | 1 | 1¼ | 484 | 495 | 484 | 495 | 165 | 223 | 168 | 76 | 228 | 240 | 44 | 44 | 171 | 89 | 62 | 82 |
| | 2 | 1 | 1¼ | 496 | 508 | 484 | 495 | 165 | 223 | 168 | 76 | 228 | 240 | 44 | 44 | 171 | 89 | 62 | 82 |
| | 3 | 1 | 1¼ | --- | --- | 496 | 508 | 165 | --- | 168 | 76 | 228 | 240 | 44 | 44 | 171 | 89 | 62 | 82 |
| | 5 | 1 | 1¼ | --- | --- | 531 | 543 | 165 | --- | 168 | 76 | 228 | 240 | 44 | 44 | 171 | 89 | 62 | 82 |

| Series | HP | Tappings | | DIMENSIONS IN MILLIMETERS - TEFC | | | | | | | | | | | | | | | |
|---|---|---|---|---|---|---|---|---|---|---|---|---|---|---|---|---|---|---|---|
| | | Disc. NPT (in) | Suct. NPT (in) | 1 PH A | 1 PH A (S.S. | 3 PH A | 3 PH A (S.S.) | B | 1 PH C | 3 PH C | D | E | E (S.S.) | F | F (S.S.) | G | H | J | K |
| CS | 1½ | 1 | 1¼ | --- | --- | 470 | 486 | 165 | --- | 168 | 76 | 228 | 240 | 44 | 44 | 171 | 89 | 62 | 82 |
| | 2 | 1 | 1¼ | --- | --- | 470 | 486 | 165 | --- | 168 | 76 | 228 | 240 | 44 | 44 | 171 | 89 | 62 | 82 |
| | 3 | 1 | 1¼ | --- | --- | 527 | 543 | 165 | --- | 168 | 76 | 228 | 240 | 44 | 44 | 171 | 89 | 62 | 82 |
| | 5 | 1 | 1¼ | --- | --- | 524 | 540 | 165 | --- | 168 | 76 | 228 | 240 | 44 | 44 | 171 | 89 | 62 | 82 |

***A strainer, approximately 20 mesh, should be installed on the suction side of the pump to prevent chips, scale or hard foreign particales from entering the pump and damaging the raceway and impeller.***

Burks Pumps T320CS7M-AB
www.PumpAgents.com - Click here for Pricing/Ordering for Pumps and Parts



## *Close Coupled Regenerative Turbine*

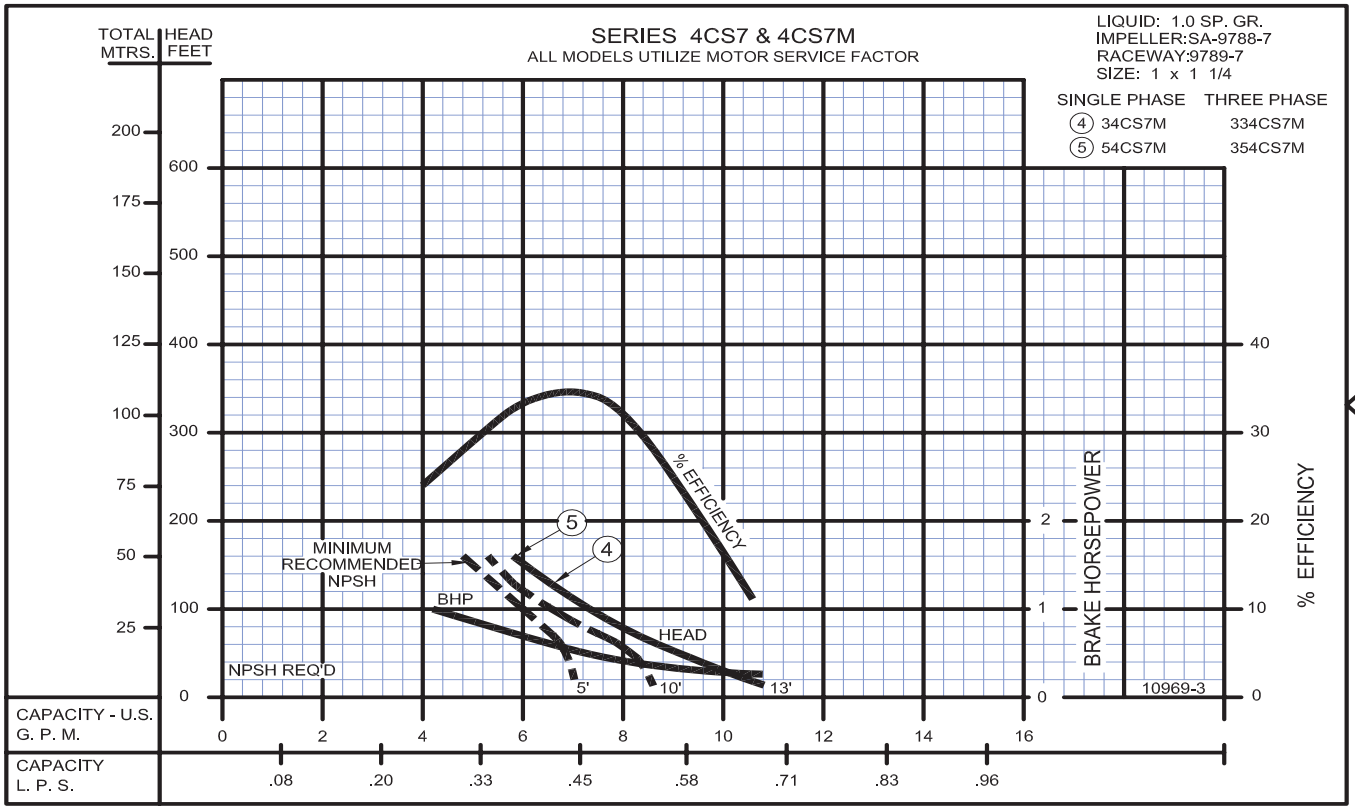


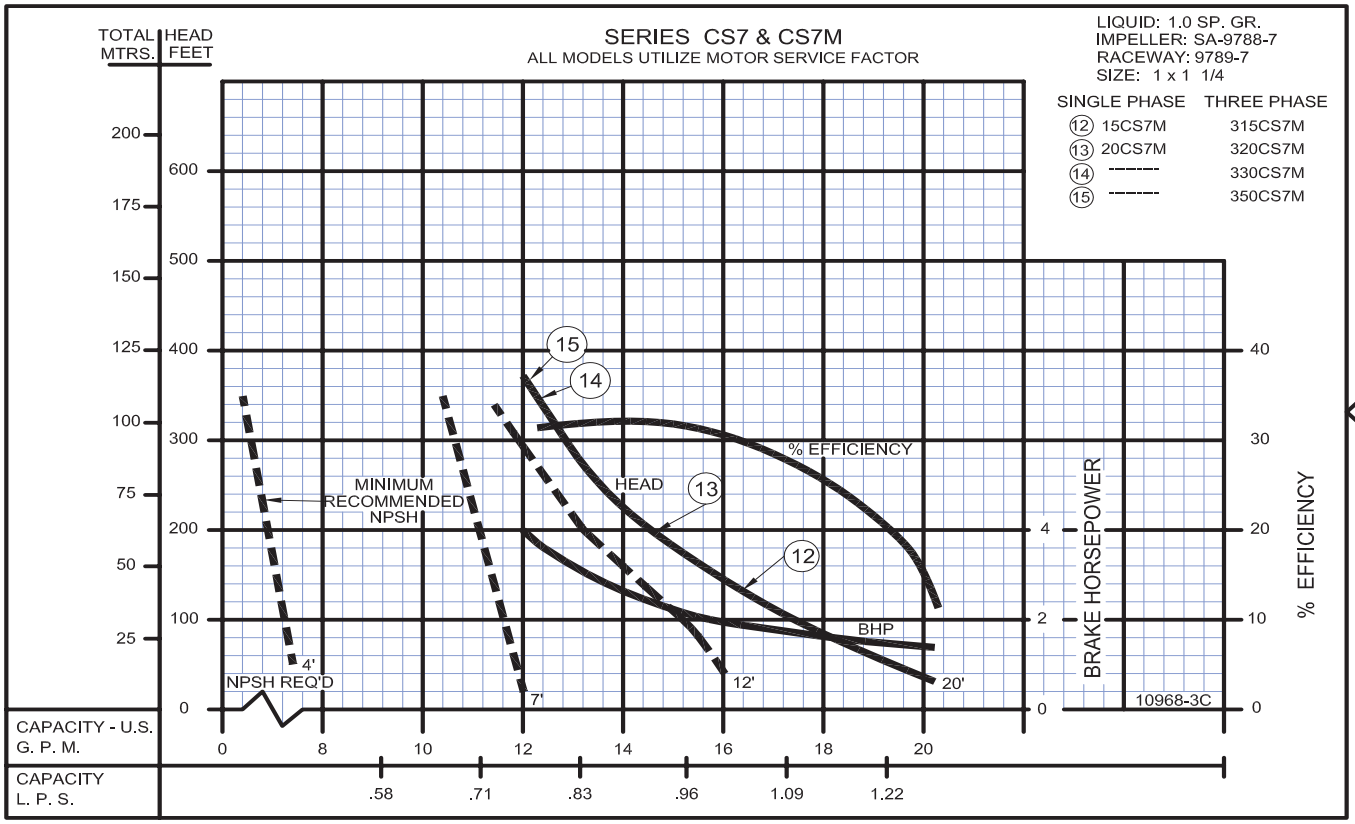

Burks Pumps T320CS7M-AB
www.PumpAgents.com - Click here for Pricing/Ordering for Pumps and Parts



## *Close Coupled Regenerative Turbine*

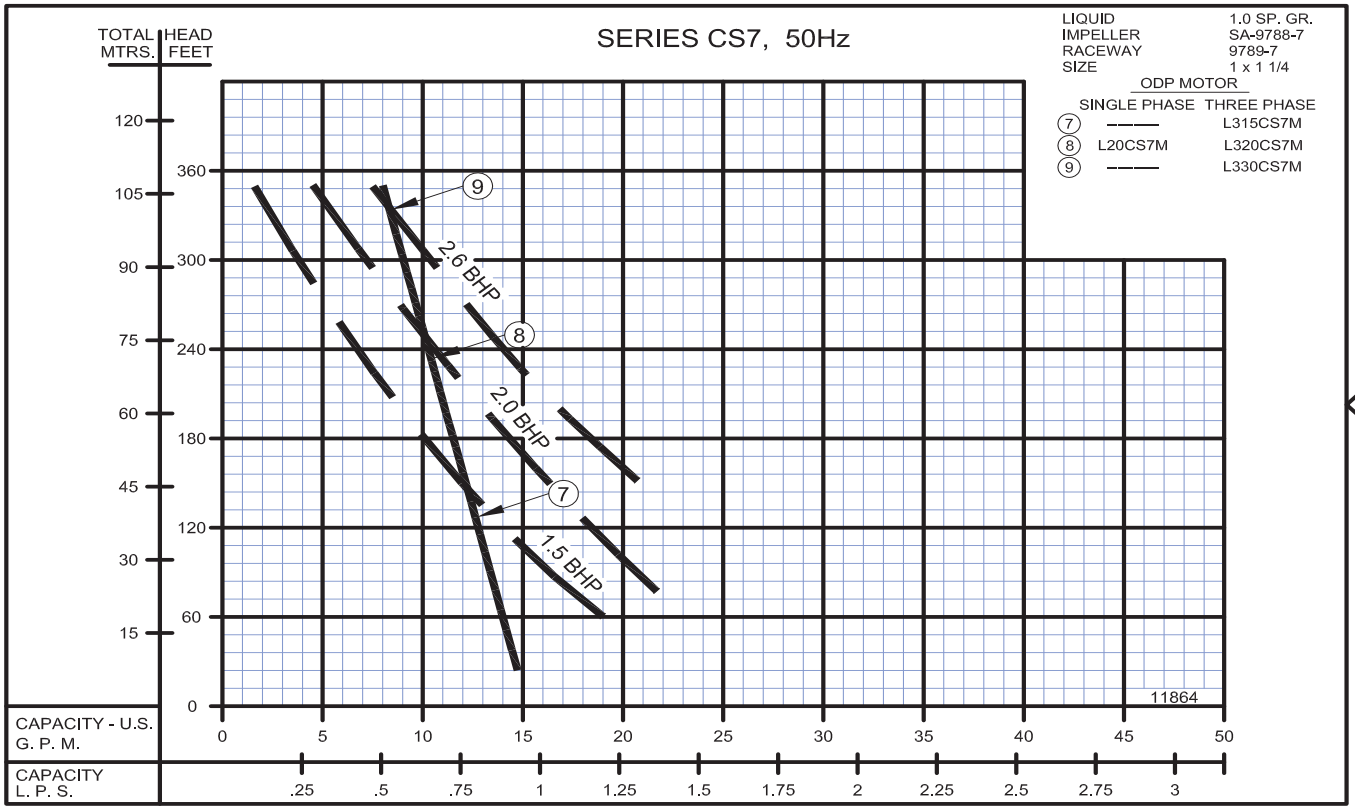


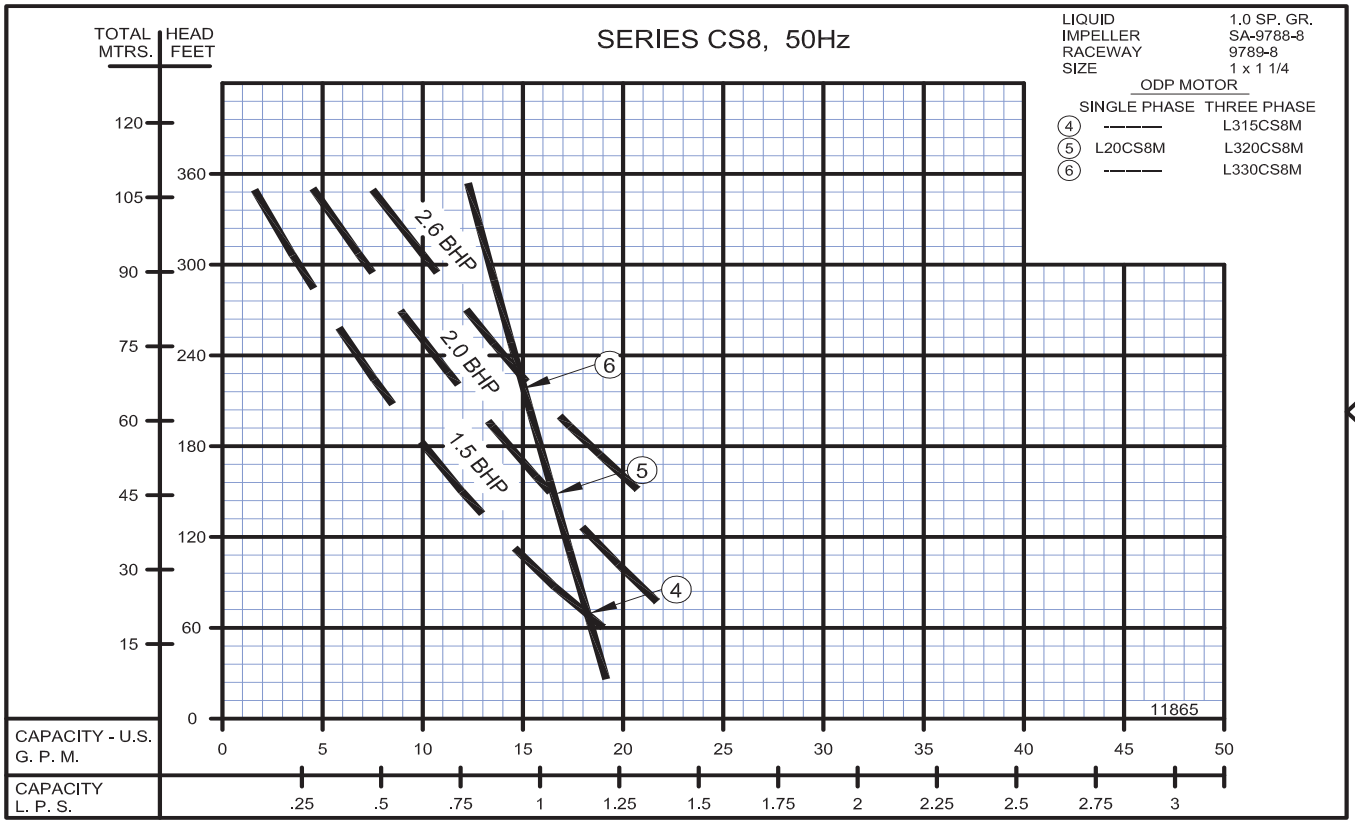

## *Turbines - Close Coupled*

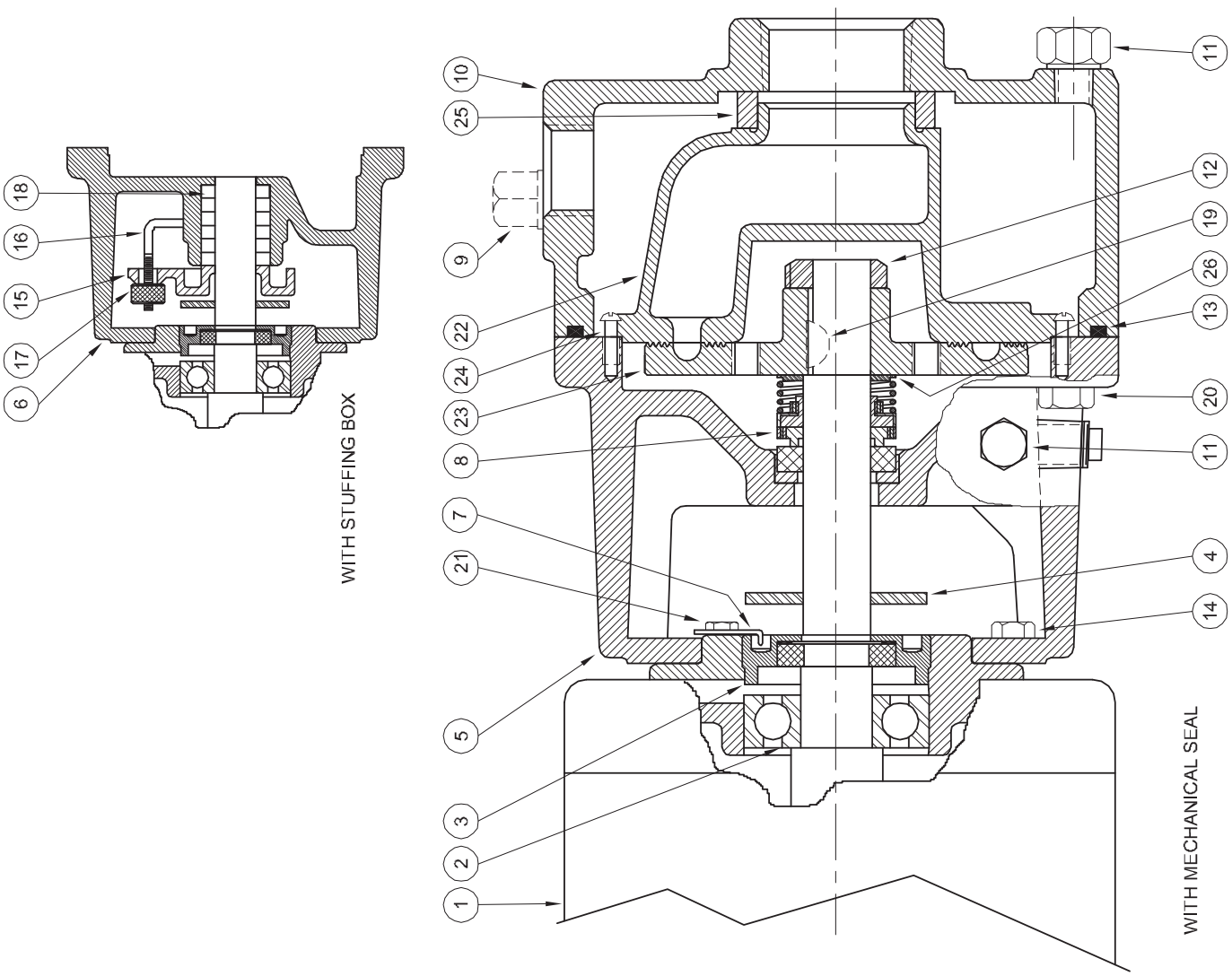


| 1 - MOTORS | | |
|---|---|---|
| RPM & PHASE | PART NUMBER | HP |
| **1725RPM - OPEN DRIP PROOF** | | |
| 1725 RPM Single Phase (ODP) | 09797<br>09799 | 1/3<br>1/2 |
| 1725 RPM Three Phase (ODP) | 09798<br>09800 | 1/3<br>1/2 |
| **3450RPM - OPEN DRIP PROOF** | | |
| 3450 RPM Single Phase (ODP) | 09805<br>09807<br>09809 | 1<br>1½<br>2 |
| 3450 RPM Three Phase (ODP) | 09806<br>09808<br>09810<br>09812<br>09855 | 1<br>1½<br>2<br>3<br>5 |
| **3450RPM - TOTALLY ENCLOSED** | | |
| 3450 RPM Three Phase (TEFC) | 09824<br>09845<br>09846 | 1½<br>2<br>3 |

| SYMBOL NUMBER | PART NUMBER | QTY | DESCRIPTION |
|---|---|---|---|
| 2 | 09144 | 1 | Ball Bearing - Pump End |
| | 05290 | 1 | Ball Bearing - Switch End (Not Shown) |
| 3 | 04206-A | 1 | Screw, Impeller Adjusting |
| 4 | 08324 | 1 | Slinger Washer |
| 5 | 09787 | 1 | Frame (for mechanical seal) |
| | 09787-C | 1 | Frame (for mechanical seal) |
| 6 | 09792 | 1 | Frame (for stuffing box) |
| 7 | 07576 | 1 | Adjusting Screw Lock |
| | 07576-S | 1 | Adjusting Screw Lock |
| | 08991 | 1 | Mechanical Seal - Buna-N |
| 8 | 09813-C | 1 | Mechanical Seal - Viton |
| | 21934 | 1 | Mechanical Seal - EPT |
| 9 | 02953 | 1 | Plug, 1/2" |
| | 02953-B | 1 | Plug, 1/2" |
| 10 | 09790-B | 1 | Case |
| | 09790-E | 1 | Case |
| 11 | 04236 | 3 | Plug, 1/4-18 NPT |
| 12 | 01404 | 1 | Impeller Lock Nut |
| | 01404-A | 1 | Impeller Lock Nut |
| | 09791 | 1 | O-Ring Gasket - Buna-N |
| 13 | 09817 | 1 | O-Ring Gasket - Viton |
| | 22135 | 1 | O-Ring Gasket - EPT |
| | 22104 | 1 | O-Ring Gasket - Teflon |
| 14 | 03121 | 4 | Screw, 1/4" x 3/4" |
| | 1-523-1 | 4 | Screw, 1/4" x 3/4" |
| 15 | 05812-B | 1 | Gland, Stuffing Box |
| 16 | 07003 | 2 | Gland Bolt |
| 17 | 04211 | 2 | Gland Nut |
| 18 | 05468 | 5 | Packing |
| 19 | 01457 | 1 | Key, Woodruff (As Shown - Repair Kits Only) |
| | 21748-A | 1 | Key, Square |
| 20 | 01931 | 4 | Screw, 7/16-14 x 1¼" Lg |
| | 1-149-1 | 4 | Screw, 7/16-14 x 1¼" Lg |
| 21 | 07577 | 1 | Screw, #10 x 3/8" Lg |

| SYMBOL NUMBER | PART NUMBER | QTY | DESCRIPTION |
|---|---|---|---|
| | 09789-5 | 1 | Raceway for CS5M |
| | 09789-5-A | 1 | Raceway for CS5M |
| | 09789-6 | 1 | Raceway for CS6M |
| 22 | 09789-7 | 1 | Raceway for CS7M |
| | 09789-8 | 1 | Raceway for CS8M |
| | 09789-9 | 1 | Raceway for CS9M |
| | 09789-9-A | 1 | Raceway for CS9M |
| | SA09788-5 | 1 | Impeller for CS5M |
| | SA09788-5-A | 1 | Impeller for CS5M |
| | SA09788-6 | 1 | Impeller for CS6M |
| * 23 | SA09788-7 | 1 | Impeller for CS7M |
| | SA09788-HT-8 | 1 | Impeller for CS8M |
| | SA09788-HT-9 | 1 | Impeller for CS9M |
| | SA09788-HT-9-A | 1 | Impeller for CS9M |
| 24 | 02535 | 2 | Screw, Raceway to Frame |
| 25 | 04231 | 1 | Suction Sleeve - Buna-N (Std) |
| | 09695 | 1 | Suction Sleeve - Viton |
| | 20285 | 1 | Suction Sleeve - EPT |
| 26 | 7441-A | 1 | Back-up Washer for CS5M ONLY |
| **DIFFERING PARTS FOR ALL BRONZE CONSTRUCTION** | | | |
| 5 | 09787-A | 1 | Frame (for mechanical seal) |
| 6 | 09792-A | 1 | Frame (for stuffing box) |
| 10 | 09790-C | 1 | Case |
| | 09790-E | 1 | Case |
| 14 | 03121-B | 4 | Screw, 1/4-20 x 3/4" Lg |
| 20 | 08771 | 4 | Screw, 7/16-14 x 1¼" Lg - SS |

(*) Standard impellers are suitable for fluid temperatures to 250°F (121°C). For higher temperatures, add the designation "HT" to impeller part number. This includes all "MJ" Jacketed Seal Pumps. EXAMPLE: SA09788-HT-5

**NOTE 1:** Impeller and raceway must be ordered as a repair kit. NOT available individually.

| REPAIR KITS FOR CS SERIES PUMPS | | | | | | | | | |
|---|---|---|---|---|---|---|---|---|---|
| **REPAIR KIT PN (Std Buna-N)** | **MODEL** | **REPAIR KIT PN (Viton)** | **MODEL** | **REPAIR KIT PN (EPT)** | **MODEL** | **REPAIR KIT PN (High Temp)** | **MODEL** | **REPAIR KIT PN (High Temp with Cooling Jacket)** | **MODEL** |
| 20522-5 | CS5M | 20522-5-MV | CS5MV | 20522-5-ME | CS5ME | 20522-HT-5 | CS5MV-HT | 20522-5-MJ | CS5MJ |
| 20522-6 | CS6M | 20522-6-MV | CS6MV | 20522-6-ME | CS6ME | 20522-HT-6 | CS6MV-HT | 20522-6-MJ | CS6MJ |
| 20522-7 | CS7M | 20522-7-MV | CS7MV | 20522-7-ME | CS7ME | 20522-HT-7 | CS7MV-HT | 20522-7-MJ | CS7MJ |
| 20522-8 | CS8M | 20522-8-MV | CS8MV | 20522-8-ME | CS8ME | 20522-HT-8 | CS8MV-HT | 20522-8-MJ | CS8MJ |
| 20522-9 | CS9M | 20522-9-MV | CS9MV | 20522-9-ME | CS9ME | 20522-HT-9 | CS9MV-HT | 20522-9-MJ | CS9MJ |
| **KIT INCLUDES:** Impeller, Raceway and Screws, Shaft Seal, Suction Sleeve, Impeller Locknut and Key, and Instructions. | | | | | | | | | |

**WARNING:**
CANCER AND REPRODUCTIVE HARM -
WWW.P65WARNINGS.CA.GOV