Burks Pumps 10WA6
www.PumpAgents.com - Click here for Pricing/Ordering for Pumps and Parts

burks®

www.cranepumps.com

Series: WA6

3500 RPM - 60 Hz.

PumpAgents.com Wholesale Pump Agents

Close Coupled Self Priming Pumps

APPLICATIONS

- Lawn Sprinkling
- Pressure Boosting
- Sprinkler Systems
- Light Irrigation
- Dewatering clean liquids
- Transfer from underground storage

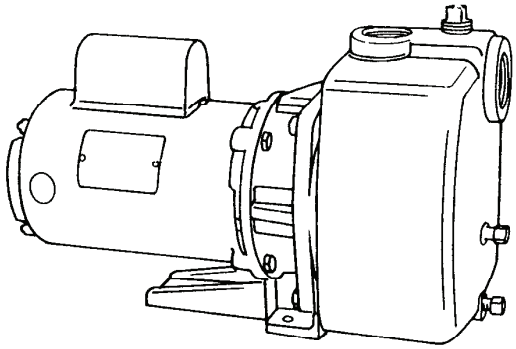

- Fast Priming pumps stays primed. Flapper and check valves on suction pipe are not required, but are recommended.
- Non-overloading performance at all catalog ratings.
- Continuous duty motors.
- Leak Proof mechanical shaft seal - self adjusting
- Cast Iron Casing with suction, discharge, prime, vacuum gauge and drain tappings.
- All Bronze or All Iron construction available.
- Glass filled Noryl® enclosed impeller with molded-in brass insert.
- Every pump is factory tested and will meet Hydraulic Institute standards

MAXIMUM OPERATING CONDITIONS	
TEMPERATURE (For Standard Noryl Impeller)	175ºF (80ºC)
INLET PRESSURE	100 PSI (689kPa)
CASING WORKING PRESSURE	200 PSI (1379kPa)

MOTOR INFORMATION

60 Hz - 3500 RPM - ODP
Single Phase: 1 thru 2 Hp - 115/230 Volts; 3 Hp. - 230 Volt
Three Phase: 1 thru 3 Hp. - 208-230/460 Volt

Voltages may differ from some suppliers. Consult factory.

Overload Protection: All single phase ODP and TEFC motors must have built-in overload protection. All three phase motors and all explosion proof motors must be installed with a magnetic starter which provides full 3-leg protection. Failure to use correct starter and overloads will void motor warranty.

MATERIALS OF CONSTRUCTION			
PART	STANDARD	ALL IRON	ALL BRONZE
Adapter	Cast Iron	Cast Iron	Bronze
Case	Cast Iron	Cast Iron	Bronze
Diffuser	Cast Iron	Cast Iron	Bronze
Impeller	Noryl®	Cast Iron	Bronze
Shaft	#303 Stainless	#303 Stainless	#303 Stainless
Shaft Seal	Carbon-Ceramic SS - Buna-N	Carbon-Ceramic SS - Buna-N	Carbon-Ceramic SS - Buna-N

WARNING:
CANCER AND REPRODUCTIVE HARM - WWW.P65WARNINGS.CA.GOV

60 HZ - PERFORMANCE AND SELECTION FOR SUCTION LIFT - 3500 RPM

Catalog No.	HP	Suction & Discharge	Discharge Pressure Pounds	Capacity GPM (LPS) At Suction Lift and Discharge Pressure Shown					
				0' Suction	5' (1.5m) Suction	10" (3m) Suction	15' (4.5m) Suction	20' (6.1m) Suction	25' (7.6m) Suction
10WA6	1	1½	20 (137kpa) 30 (206kpa) 40 (275kpa)	52 (3.3) 43 (2.7) 23 (1.4)	51 (3.2) 39 (2.4) 20 (1.2)	48 (3.0) 36 (2.2) 14 (0.8)	46 (2.9) 33 (2.0) 5 (0.3)	43 (2.7) 30 (1.8 ---	36 (2.2) 25 (1.5) ---
15WA6	1½	1½	20 (137kpa) 30 (206kpa) 40 (275kpa) 50 (344kpa)	61 (3.8) 58 (3.6) 47 (2.9) 24 (1.5)	61 (3.8) 58 (3.6) 43 (2.7) 19 (1.1)	56 (3.5) 54 (3.4) 38 (2.3) 9 (0.5)	53 (3.3) 51 (3.2) 35 (2.2) ---	49 (3.0) 47 (2.9) 30 (1.8) ---	41 (2.5) 40 (2.5) --- ---
20WA6	2	1½	20 (137kpa) 30 (206kpa) 40 (275kpa) 50 (344kpa)	73 (4.6) 68 (4.2) 58 (3.6) 37 (2.3)	69 (4.3) 67 (4.2) 54 (3.4) 31 (1.9)	67 (4.2) 64 (4.0) 50 (3.1) 23 (1.4)	63 (3.9) 61 (3.8) 46 (2.9) ---	58 (3.6) 56 (3.5) 41 (2.5) ---	50 (3.1) 48 (3.0) 34 (2.1) ---
30WA6	3	1½	20 (137kpa) 30 (206kpa) 40 (275kpa) 50 (344kpa)	93 (5.8) 85 (5.3) 72 (4.5) 50 (3.1)	93 (5.8) 83 (5.2) 68 (4.2) 43 (2.7)	93 (5.8) 83 (5.2) 64 (4.0) 35 (2.2)	92 (5.8) 80 (5.0) 59 (3.7) 22 (1.3)	82 (5.1) 76 (4.7) 55 (3.4) ---	66 (4.1) 64 (4.0) 46 (2.9) ---

Series: WA6

3500 RPM - 60 Hz.

www.PumpAgents.com - Click here for Pricing/Ordering for Pumps and Parts

burks®
www.cranepumps.com

Close Coupled Self Priming Pumps

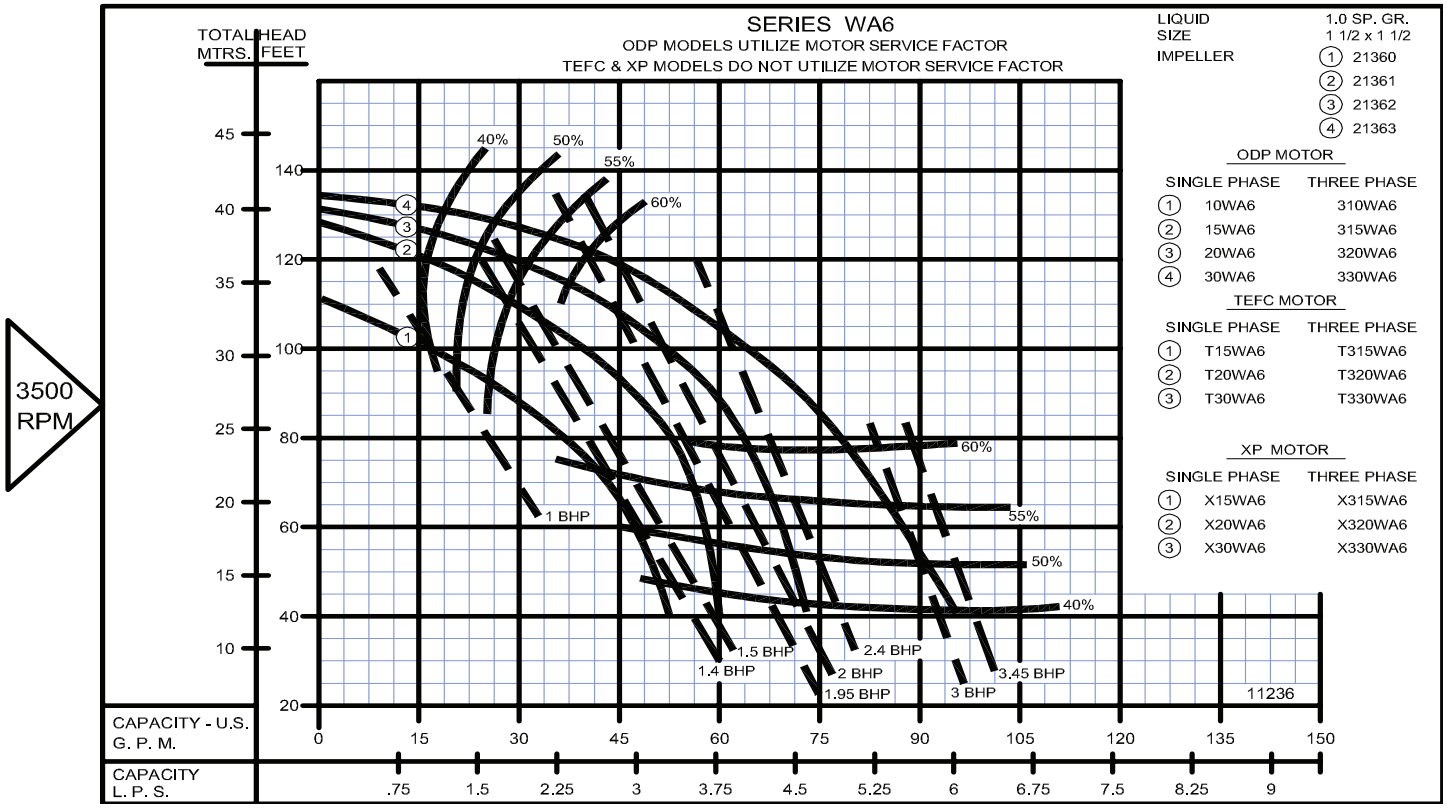

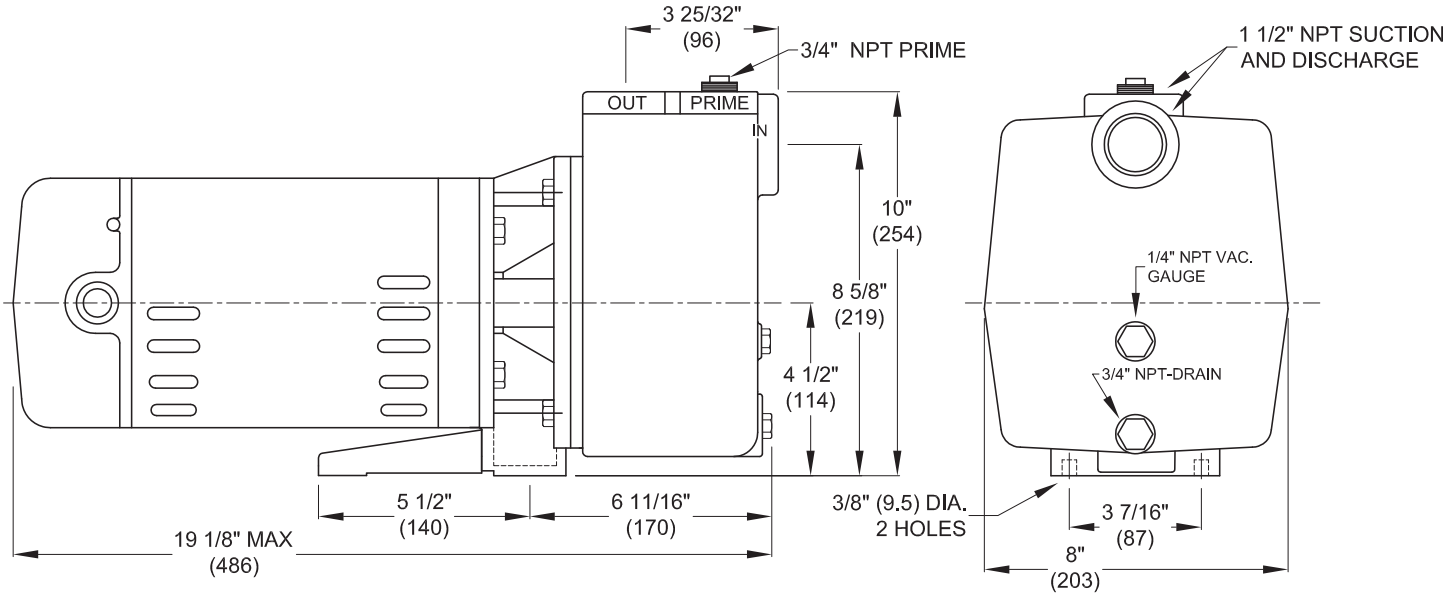

DO NOT USE FOR CONSTRUCTION PURPOSES. CERTIFIED DRAWINGS AVAILABLE ON REQUEST

CRANE®
A Crane Co. Company

PUMPS & SYSTEMS

PumpAgents.com
Wholesale Pump Agents

USA: (937) 778-8947 • Canada: (905) 457-6223 • International: (937) 615-3598

Centrifugals - Self-Priming

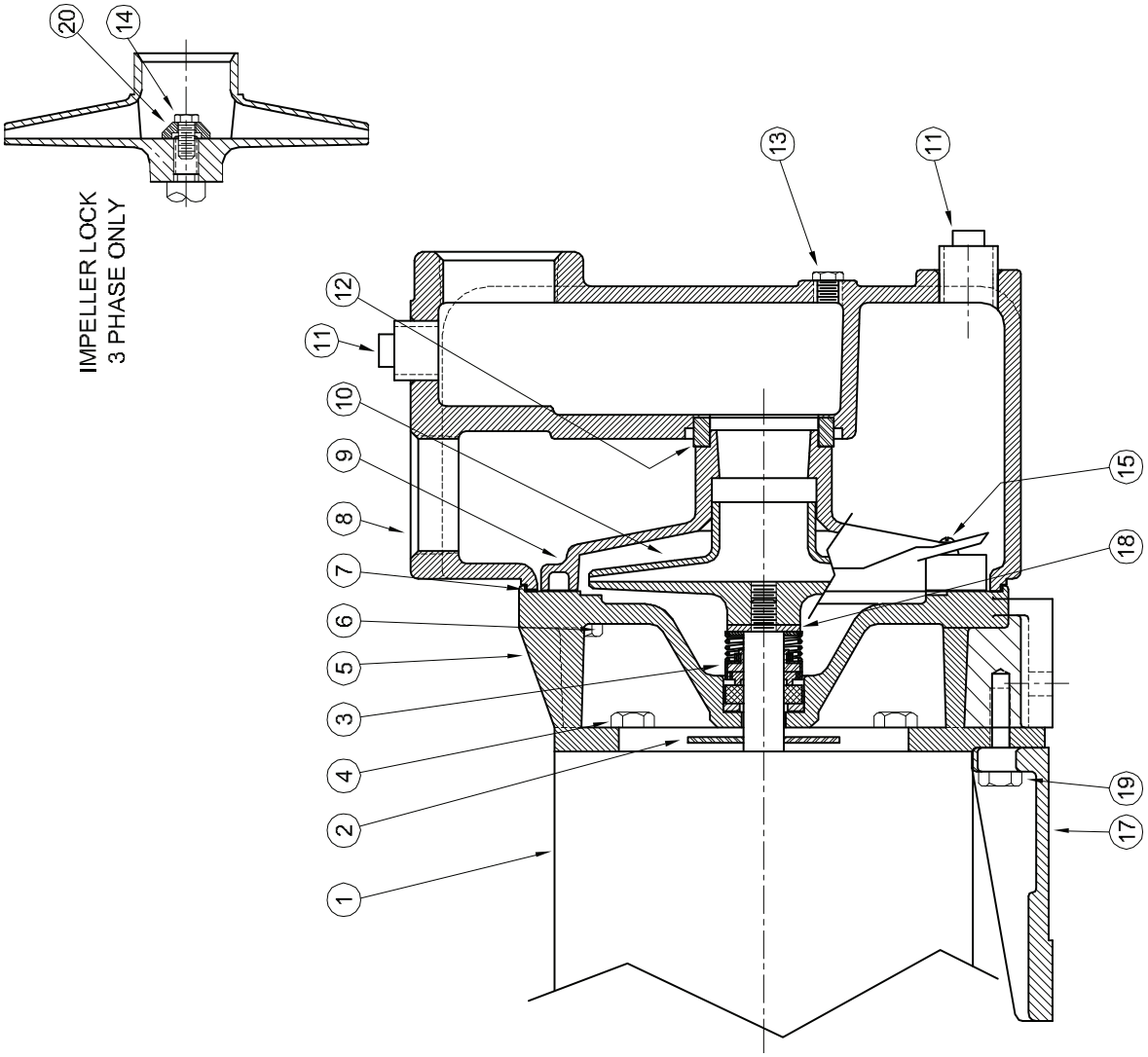

1 - MOTORS (ALL 56J FRAME)			
	RPM & PHASE	PART NUMBER	HP
OPEN DRIP PROOF	3500 RPM Single Phase (ODP)	010-211-371-02	1
		015-211-371-02	1½
		020-211-371-02	2
		030-215-371-02	3
	3500 RPM Three Phase (ODP)	010-230-361-02	1
		015-230-361-02	1½
		020-230-361-02	2
		030-230-361-02	3
TOTALLY ENCLOSED	3500 RPM Single Phase (TEFC)	010-211-372-02	1
		015-211-372-02	1½
		020-211-372-02	2
	3500 RPM Three Phase (TEFC)	010-230-362D02	1
		015-230-362D02	1½
		020-230-362D02	2
		030-230-362D02	3
EXPLOSION PROOF	3500 RPM Single Phase (XP)	010-211-374-02	1
		015-211-374-02	1½
		020-211-374-02	2
	3500 RPM Three Phase (XP)	010-230-364-02	1
		015-230-364-02	1½
		020-230-364-02	2
		030-230-364-02	3

Burks Pumps 10WA6
www.PumpAgents.com - Click here for Pricing/Ordering for Pumps and Parts

SYMBOL NUMBER	PART NUMBER	QTY	DESCRIPTION
	DIFFERING PARTS FOR ALL BRONZE CONSTRUCTION		
2	08105	1	Slinger Washer
3	08514	1	Mechanical Seal - Buna-N (Std)
	09762	1	Mechanical Seal - Viton
	20764-C	1	Mechanical Seal - EPT**
4	03122	4	Cap Screw 3/8-16 x 3/4" Lg
5	09740	1	Adapter for 10WA6 Only
	09740-1	1	Adapter - All except 10WA6
6	04235	4	Cap Screw 3/8-16 x 1¼" Lg
7	08988	1	Gasket
8	21123	1	Case
9	21124	1	Diffuser - All except 10WA6
	21157	1	Diffuser - 10WA6
* 10	21360	1	Impeller, 10WA6 - Noryl
	21361	1	Impeller, 15WA6 - Noryl
	21362	1	Impeller, 20WA6 - Noryl
	21363	1	Impeller, 30WA6 - Noryl
	21360	1	Impeller, T15WA6, X15WA6 - Noryl
	21361	1	Impeller, T20WA6, X20WA6 - Noryl
	21362	1	Impeller, T30WA6, X30WA6 - Noryl
11	00947	2	Pipe Plug
12	04231	1	Suction Sleeve - Buna-N
	09695	1	Suction Sleeve - Viton
	20285	1	Suction Sleeve - EPT
13	04236	1	Pipe Plug, 1/4" Brass
14	21182	1	Lock Screw - 3 Phase, 1HP
	21285	1	Lock Screw - 3 Phase, 1½, 2 & 3HP
15	20101	2	Roll Pin
17	09744	1	Base
18	02029	1	Washer, All except 10WA6
19	21236	1	Cap Screw
20	21181-C	1	Washer - 3 Phase, ALL

SYMBOL NUMBER	PART NUMBER	QTY	DESCRIPTION
	DIFFERING PARTS FOR ALL BRONZE CONSTRUCTION		
4	03122-A	4	Cap Screw, 3/8-16 x 3/4" Lg
5	09740-A	1	Adapter for 10WA6 Only
	09740-A-1	1	Adapter - All except 10WA6
6	03288	4	Cap Screw, 3/8-16 x 1¼" Lg
8	21123-A	1	Case
9	21124-A	1	Diffuser - All except 10WA6
	21157-A	1	Diffuser - 10WA6
10	09660-5.44	1	Impeller, 10WA6 - Bronze
	09731-5.66	1	Impeller, 15WA6 - Bronze
	09729-5.66	1	Impeller, 20WA6 - Bronze
	09680-5.66	1	Impeller, 30WA6 - Bronze
11	00947-A	2	Pipe Plug, 3/4" - Brass
	DIFFERING PARTS FOR ALL IRON CONSTRUCTION		
10	09660-B-5.44	1	Impeller, 10WA6 - Iron
	09731-B-5.66	1	Impeller, 15WA6 - Iron
	09680-C-1-5.13	1	Impeller, 20WA6 - Iron
	09680-C-1-5.66	1	Impeller, 30WA6 - Iron
13	04236-A	1	Pipe Plug - 1/4" - Iron
18	20628	1	Washer - SS
20	21181-A	1	Washer - SS

(*) WA6 Series pumps have been manufactured with either Noryl or Bronze impellers as standard. All replacement impellers will be Noryl as listed, unless bronze is specified. For bronze impellers, refer to "Differing Parts for All Bronze Construction."
Stock pump catalog numbers shown for 1 phase units. Use same impellers and diffusers for 3 phase units.

WARNING:
CANCER AND REPRODUCTIVE HARM -
WWW.P65WARNINGS.CA.GOV