article number 10-24268 pump F5B-9

Pump No. Pump Nr.	Pumptype Pumptyp	Kam (3) Thickness Tjocklek		No. Nr.	Screw Skruv (12)	Impeller (5)	Endcover Lock (4)	Mark on endcover Märkes på lock	Packning Gasket (9)
10-24268-1	F5B-9	1/1	4.9	01-42397	05-04-117	08-1027 B	01-45599		01-42401
10-24268-2	F5B-902	1/2	3.1	01-45014	05-04-175				01-45933
10-24268-3									
10-24268-4	F5B-9	1/1	4.9	01-42397	05-04-117	08-1027 B	01-42398	F5B-9 + 10-24268-4 + man.year + week	01-42401
10-24268-5	F5B-902	1/2	3.1	01-45014	05-04-175			F5B-902 + 10-24268-5 + man.year + week	

P05

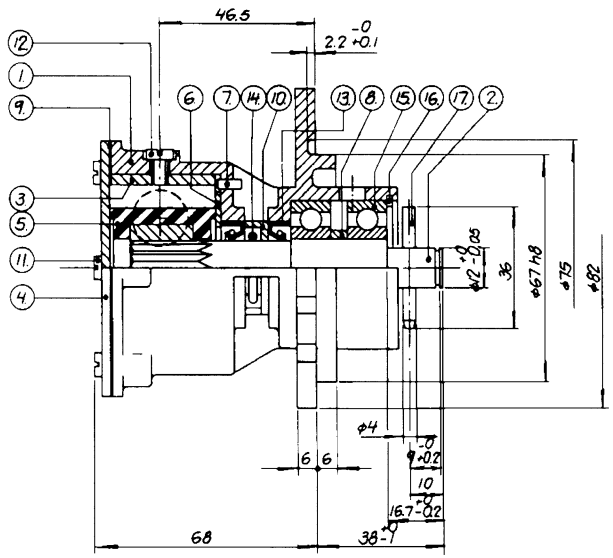

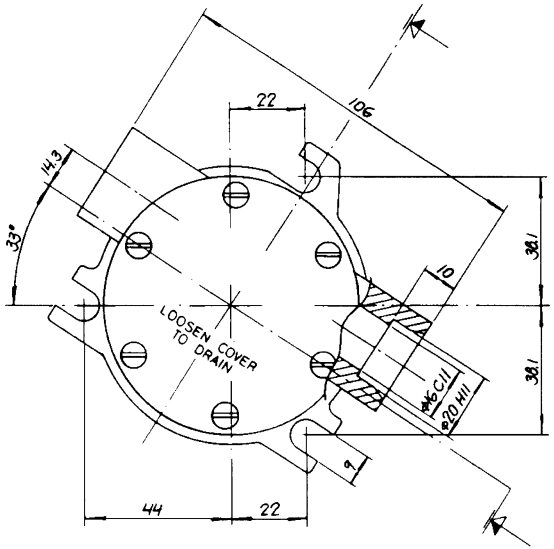

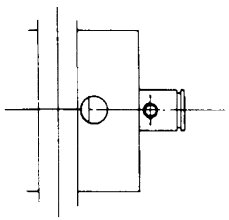

Part No. Det. nr	Nos. Antal	Description Benämning	Material	Dimension	Draw. No Ritn. nr
17	1	Stift Pin			05-03-524
16	1	Låsring Retaining ring			05-34-130
15	2	Kullager Ballbearing			05-08-129
14	1	O-ring			05-06-501
13	2	Läppdtning Lipseal			05-29-105
12	1	Skruv Screw			See table
11	6	Skruv Screw			05-04-163
10	1	Distansring Spacer			01-45181
9	1	Packning Gasket			See table
8	1	Distanshylsa Spacer			01-42537
7	1	Stift Pin			01-42400
6	1	Slitbricka Wear plate			01-42399
5	1	Impeller			See table
4	1	Lock Endcover			See table
3	1	Kam Cam			See table
2	1	Axel Shaft			01-45821
1	1	Pumphus Body			01-24269

P04 P05

This drawing is the property of JP. Protected in accordance with prevailing law. Denna ritning är JP:s egendom. Skyddad enligt gällande lag.

Tolerance unless otherwise noted. Tolerans där ej annat angivas. Unmachined surface ± IT 17/2. Machined surface ± IT 14/2. Sharp edges broken. Skarpa kanter brytes. Burrs not permitted. Grader tillåts ej. Radius unless otherwise noted. Radie där ej annat angivas.

Read. Datum 84-12-05. Sign. J.

JOHNSON PUMP AB ÖREBRO SWEDEN

Title / Titel: Johnson Impellerpump 10-24268

Scale / Skala 1:1

1003	P06	Ändring av lock, tompa	950627	JG
459	P05	Packn. 01-45933 tillk. utf. 10-24268-3	910320	JG
4.3	P05	Impeller 07-85&250 ers. av 08-1027B	910320	JG
2B4	P04	Pos. 17 05-03-524 var 05-03-118	891018	RE
	3	10-24268-4/-5 tillk.	851008	J.
	2	10-24268-3 tillk.	850814	J.
	1.	Skruv 05-04-163 var 05-04-162	85-03-28	J.

RJ RJ RJ RJ

The product, i.e. concept, design and construction, is the property of Johnson Pump AB