www.PumpAgents.com
PumpAgents.com - Click here for Pricing/Ordering

SECTION	2B
PAGE	10
ISSUED	2/03
REPLACES	12/01

SERIES: G6-1-1/2 thru 4G9-4F

burks pumps®
420 Third Street
Piqua, Ohio 45356-0603

CLOSED COUPLED CENTRIFUGAL PUMPS

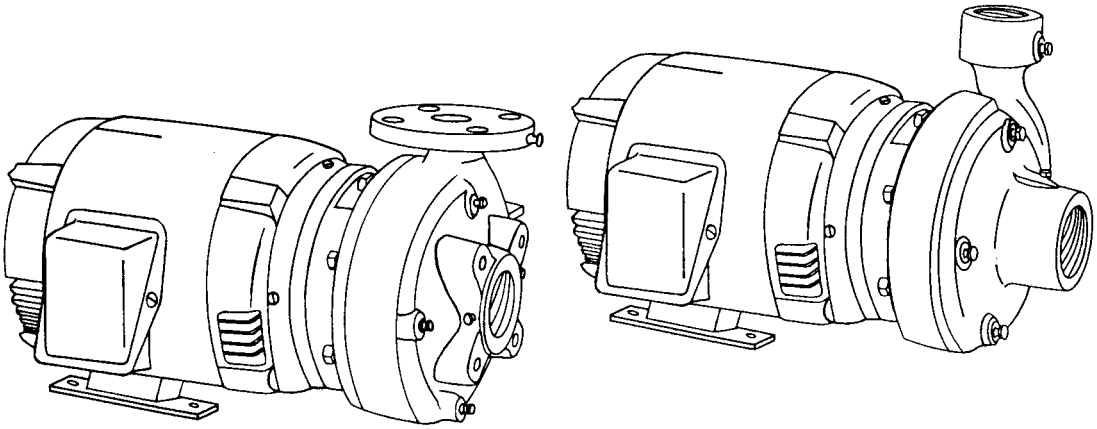

3500RPM - 60Hz.

CAPACITIES TO 960GPM (60.6LPS)
HEADS TO 380 FEET (116M)

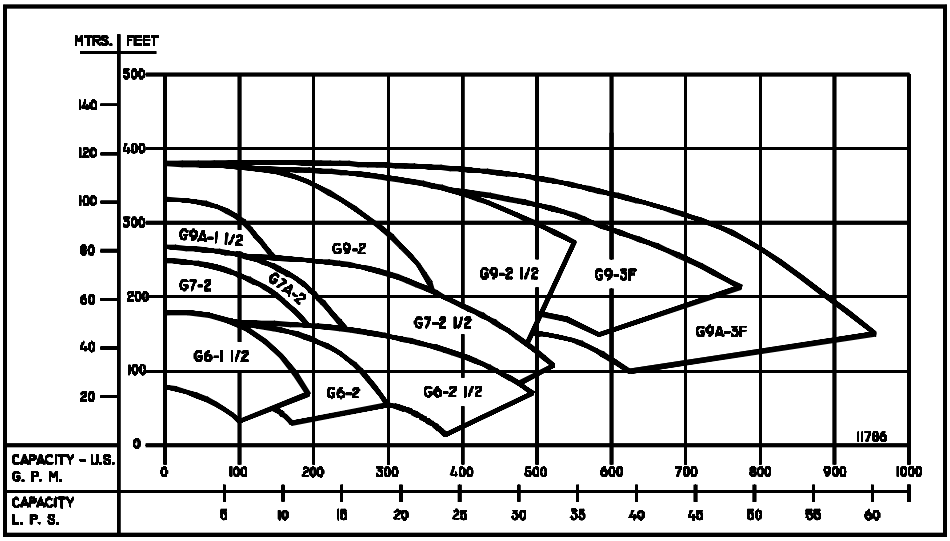

2900RPM - 50Hz.

CAPACITIES TO 630GPM (39.7LPS)
HEADS TO 265 FEET (80.8M)

Individual performance curves should be checked for final selection.

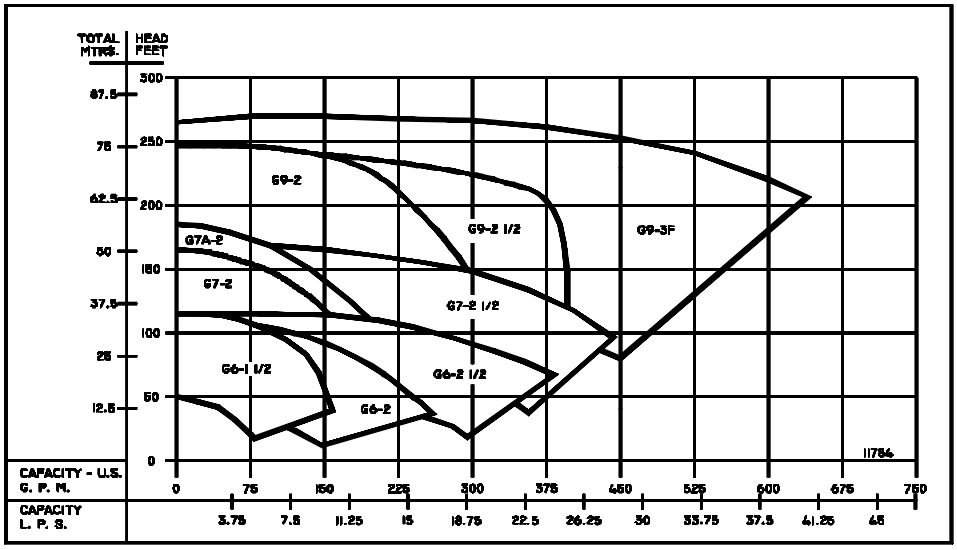

PumpAgents.com - buy pumps and parts online

www.PumpAgents.com

burks pumps®
420 Third Street
Piqua, Ohio 45356-0603

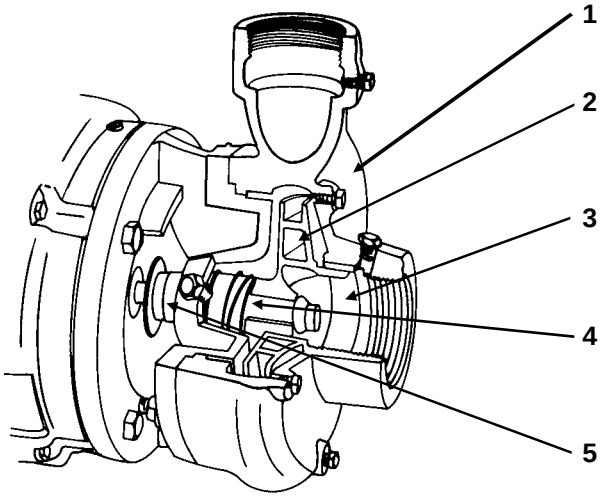

PRODUCT FEATURES

1. **RADIAL SPLIT CASING DESIGN**
   Casing is close grain iron of 30,000 p.s.i. minimum tensile strength. Back pull-out design eliminates the need to disturb piping should the pump ever require service - the casing stays in the line. Centerline discharge. Stud mounted casing assures positive alignment and allows rotation of discharge to eight different positions. Openings are provided for test gauges, for venting and for draining the pump.

2. **ENCLOSED BRONZE IMPELLER**
   Enclosed bronze impeller is of latest hydraulic design for maximum efficiency. It is balanced for vibration free operation. Precision fit to shaft and double-locked with key and cap screw.

3. **REPLACEABLE CASING WEAR RING**
   Prevents wear on casing and is easy to replace.

4. **MECHANICAL SHAFT SEAL**
   Mechanical Shaft Seal is self-adjusting for temperatures up to 225°F (107°C) and pressures to 150 psi (1034kpa). Has ceramic seat and carbon seal faces for long trouble-free service. Special seals are available for higher temperatures and fluids other than water. Tapped opening is provided in the seal chamber for flushing seal faces.

5. **BRONZE SHAFT SLEEVE**
   Gasketed and keyed hook-type sleeve protects shaft wear and corrosion in seal area.

6. **MOTORS**
   The standard Type JM motors supplied with these pumps offer the advantages of quiet operation, controlled shaft deflection for longer mechanical seal life and bearings sized to provide good service life. All motors are supplied by manufacturers providing field service facilities.

7. **INTERCHANGEABILITY**
   The complete liquid end of any size pump is interchangeable between motors on close-coupled pumps and the BURKS power frames of comparable size providing inventory flexibility, plus an option for handling emergency service.

8. **FACTORY TESTED**
   After careful assembly and inspection, **EVERY** pump is factory tested and will meet Hydraulic Institute standards.

FOR TEMPERATURES TO 500°F (260°C).
All models, with the exception of the G7-2-1/2 and all G9 series pumps are available in a Jacketed Seal Cavity design for pumping hot oil, hot water and heat transfer fluids in common use in high temperature heating or cooling applications. This feature greatly extends seal life in high temperature applications. To order, add suffix "MJ" to pump catalog number for temperatures below 400°F (204°C) and add suffix "MJK" to pump catalog number for temperatures over 400°F (204°C). Example: G6-1-1/2MJ. See Section on High Temperature Pumps for more information.

MAXIMUM OPERATING CONDITIONS	
Maximum Pumping Temperature*	225°F (107°C)
Maximum Inlet Pressure	100 PSI (690kpa)
Maximum Case Working Pressure	200 PSI (1379kpa)

* FOR STANDARD BUNA-N SEAL

SUCTION & DISCHARGE SIZES		
* SERIES	SUCTION	DISCHARGE
G6-1-1/2	2"	1-1/2"
G6-2 & 2F	2-1/2"	2"
G6-2-1/2 & 2-1/2F	3"	2-1/2"
G7-2 & 2F	2-1/2"	2"
G7A-2 & 2F	2-1/2"	2"
G7-2-1/2 & 2-1/2F	3"	2-1/2"
G9-1-1/2	2"	1-1/2"
G9-2 & 2F	2-1/2"	2"
G9-2-1/2 & 2-1/2F	3"	2-1/2"
G9-3F & G9A-3F	4"	3"
G9-4F	5"	4"

*F Suffix Denotes ANSI 125# Flat Face Flanges

MATERIALS OF CONSTRUCTION			
Part	Bronze Fitted	All Bronze	All Iron
Adapter	Cast Iron	Bronze	Cast Iron
Casing	Cast Iron	Bronze	Cast Iron
Casing wear ring	Bronze	Bronze	Steel
Shaft	Steel	Steel	Steel
Shaft sleeve	Bronze	Bronze	#316 S. Steel
Impeller	Bronze	Bronze	Cast Iron
Shaft seal	Carbon-Ceramic S. Steel-Buna-N	Carbon-Ceramic S. Steel-Buna-N	Carbon-Ceramic S. Steel-Buna-N

PumpAgents.com - buy pumps and parts online

www.PumpAgents.com

SECTION	2B
PAGE	14
ISSUED	2/03
REPLACES	12/01

burks pumps®
420 Third Street
Piqua, Ohio 45356-0603

DIMENSIONS

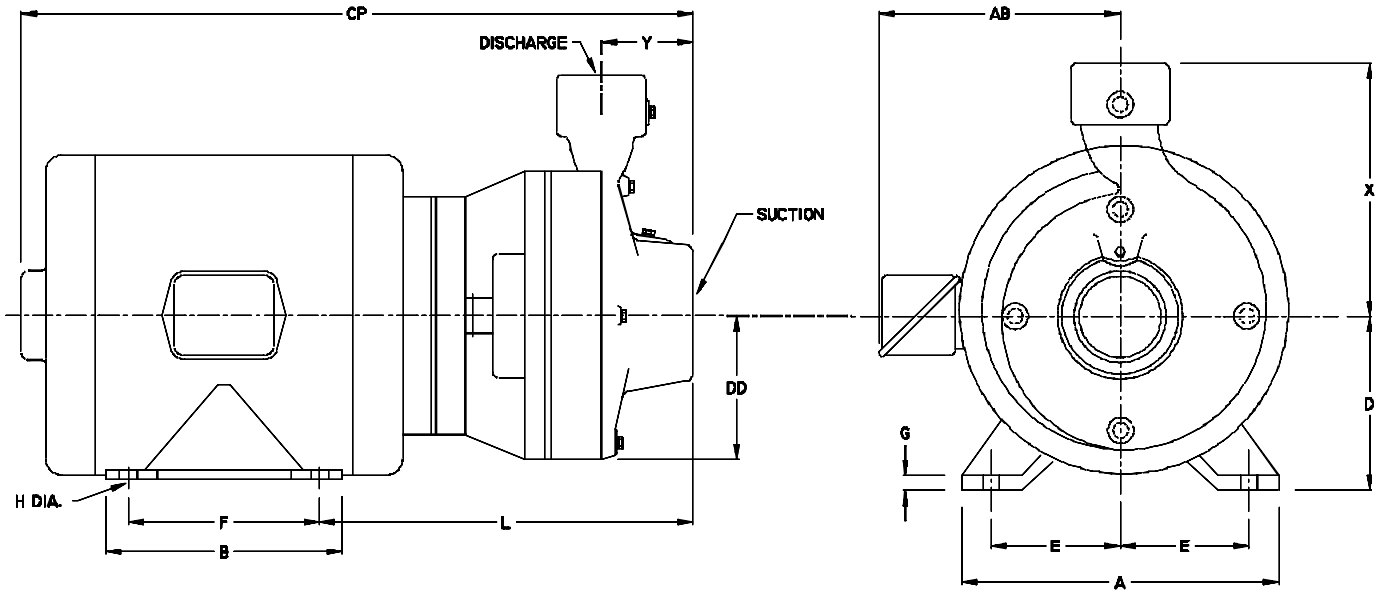

SERIES 4G7-2, 4G7A-2, 4G7-2 1/2, G7-2, G7A-2 & G7-2 1/2

Catalog Number		HP	Motor Frame Size	Disc. NPT	Suct. NPT	DIMENSIONS IN INCHES												
1 Phase	3 Phase					A	AB	B	CP	D	DD	E	F	G	H	L	X	Y
1750 & 1450 RPM																		
104G7-2	3104G7-2	1	143JM	2	2 1/2	7	8 15/16	5	16 7/8	3 1/2	5	2 3/4	4	3/8	11/32	10 7/16	8 1/4	3 3/4
154G7-2	3154G7-2	1 1/2	145JM			7	8 15/16	6	17 7/8	3 1/2	5	2 3/4	5	3/8	11/32	10 7/16	8 1/4	3 3/4
204G7-2	------	2	182JM			8 3/4	9 7/8	5 3/4	18 11/16	4 1/2	5	3 3/4	4 1/2	1/2	13/32	11 3/16	8 1/4	3 3/4
------	3204G7-2	2	145JM			7	8 15/16	6	17 7/8	3 1/2	5	2 3/4	5	3/8	11/32	10 7/16	8 1/4	3 3/4
104G7A-2	3104G7A-2	1	143JM	2	2 1/2	7	8 15/16	5	16 7/8	3 1/2	5	2 3/4	4	3/8	11/32	10 7/16	8 1/4	3 3/4
154G7A-2	3154G7A-2	1 1/2	145JM			7	8 15/16	6	17 7/8	3 1/2	5	2 3/4	5	3/8	11/32	10 7/16	8 1/4	3 3/4
204G7A-2	------	2	182JM			8 3/4	9 7/8	5 3/4	18 11/16	4 1/2	5	3 3/4	4 1/2	1/2	13/32	11 3/16	8 1/4	3 3/4
------	3204G7A-2	2	145JM			7	8 15/16	6	17 7/8	3 1/2	5	2 3/4	5	3/8	11/32	10 7/16	8 1/4	3 3/4
154G7-2 1/2	3154G7-2 1/2	1 1/2	145JM	2 1/2	3	7	8 15/16	6	17 7/8	3 1/2	5 1/2	2 3/4	5	3/8	11/32	10 7/16	9 1/4	3 1/2
204G7-2 1/2	------	2	182JM			8 3/4	9 7/8	5 3/4	18 11/16	4 1/2	5 1/2	3 3/4	4 1/2	1/2	13/32	11 3/16	9 1/4	3 1/2
------	3204G7-2 1/2	2	145JM			7	8 15/16	6	17 7/8	3 1/2	5 1/2	2 3/4	5	3/8	11/32	10 7/16	9 1/4	3 1/2
304G7-2 1/2	------	3	184JM			8 3/4	9 7/8	6 3/4	19 11/16	4 1/2	5 1/2	3 3/4	5 1/2	1/2	13/32	11 3/16	9 1/4	3 1/2
------	3304G7-2 1/2	3	182JM			8 3/4	9 7/8	5 3/4	18 11/16	4 1/2	5 1/2	3 3/4	4 1/2	1/2	13/32	11 3/16	9 1/4	3 1/2
3500 & 2900 RPM																		
50G7-2	------	5	184JM	2	2 1/2	8 3/4	9 7/8	6 3/4	19 11/16	4 1/2	5	3 3/4	5 1/2	1/2	13/32	11 3/16	8 1/4	3 3/4
------	350G7-2	5	182JM			8 3/4	9 7/8	5 3/4	18 11/16	4 1/2	5	3 3/4	4 1/2	1/2	13/32	11 3/16	8 1/4	3 3/4
------	375G7-2	7 1/2	184JM			8 3/4	9 7/8	6 3/4	19 11/16	4 1/2	5	3 3/4	5 1/2	1/2	13/32	11 3/16	8 1/4	3 3/4
------	3100G7-2	10	213JM			10 3/8	11 1/16	7 1/4	21 1/4	5 1/4	5	4 1/4	5 1/2	5/8	13/32	12 5/16	8 1/4	3 3/4
50G7A-2	------	5	184JM	2	2 1/2	8 3/4	9 7/8	6 3/4	19 11/16	4 1/2	5	3 3/4	5 1/2	1/2	13/32	11 3/16	8 1/4	3 3/4
------	350G7A-2	5	182JM			8 3/4	9 7/8	5 3/4	18 11/16	4 1/2	5	3 3/4	4 1/2	1/2	13/32	11 3/16	8 1/4	3 3/4
------	375G7A-2	7 1/2	184JM			8 3/4	9 7/8	6 3/4	19 11/16	4 1/2	5	3 3/4	5 1/2	1/2	13/32	11 3/16	8 1/4	3 3/4
------	3100G7A-2	10	213JM			10 3/8	11 1/16	7 1/4	21 1/4	5 1/4	5	4 1/4	5 1/2	5/8	13/32	12 5/16	8 1/4	3 3/4
------	3150G7A-2	15	215JM			10 3/8	11 1/16	8 3/4	22 5/8	5 1/4	5	4 1/4	7	5/8	13/32	12 5/16	8 1/4	3 3/4
------	3150G7-2 1/2	15	215JM	2 1/2	3	10 3/8	11 1/16	8 3/4	22 5/8	5 1/4	5 1/2	4 1/4	7	5/8	13/32	12 5/16	9 1/4	3 1/2
------	3200G7-2 1/2	20	254JM			12	11 9/16	10 1/4	26 3/16	6 1/4	5 1/2	5	8 1/4	7/8	17/32	13 7/8	9 1/4	3 1/2
------	3250G7-2 1/2	25	256JM			12	11 9/16	12	27 15/16	6 1/4	5 1/2	5	10	7/8	17/32	13 7/8	9 1/4	3 1/2
------	3300G7-2 1/2	30	284JM			13 3/4	13	11 1/2	27 15/16	7	5 1/2	5 1/2	9 1/2	7/8	17/32	13 7/8	9 1/4	3 1/2

DIMENSIONS SHOWN ABOVE ARE APPROXIMATE MAXIMUM DIMENSIONS FOR STANDARD PUMPS EQUIPPED WITH ODP MOTORS.

PumpAgents.com - buy pumps and parts online

www.PumpAgents.com

SECTION	2B
PAGE	28
ISSUED	2/03
REPLACES	12/01

60Hz PERFORMANCE CURVE

burks pumps
420 Third Street
Piqua, Ohio 45356-0603

END SUCTION CENTRIFUGAL PUMPS

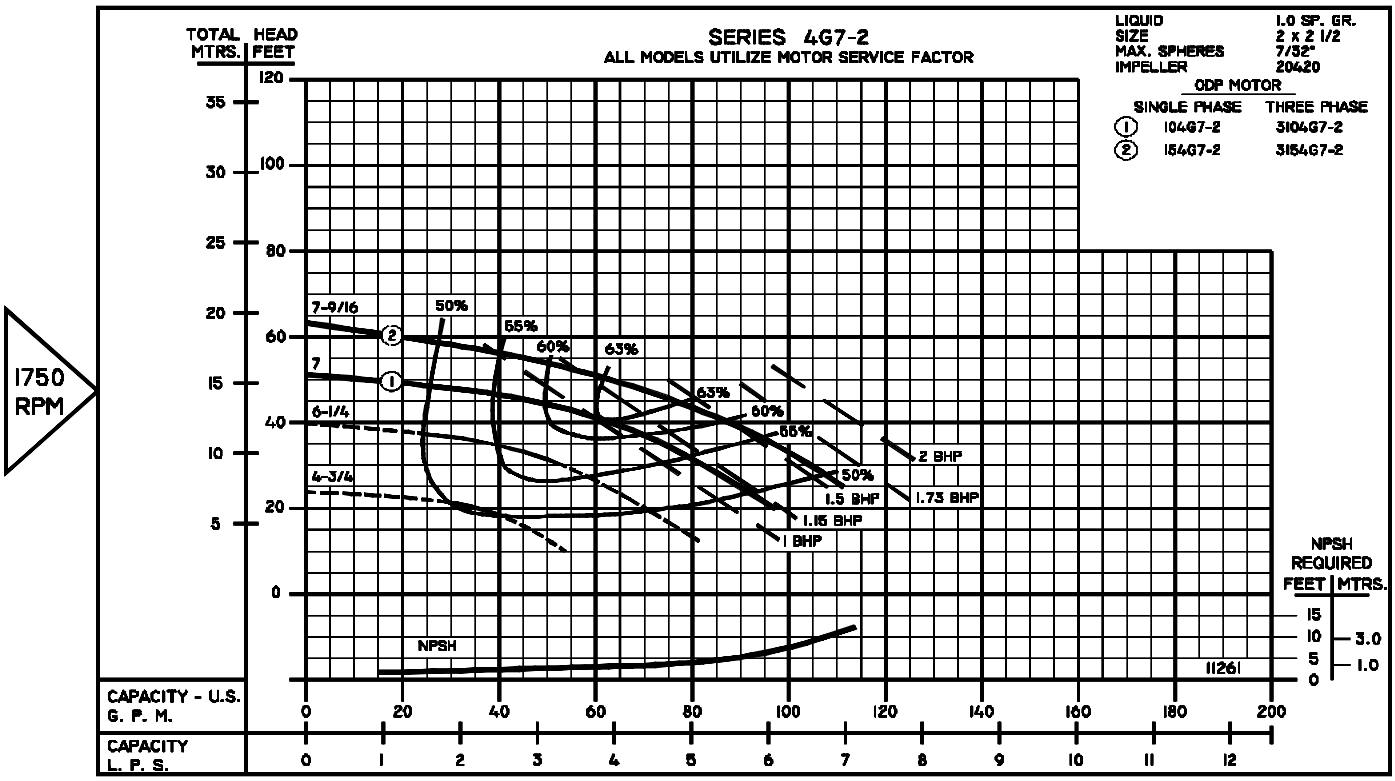

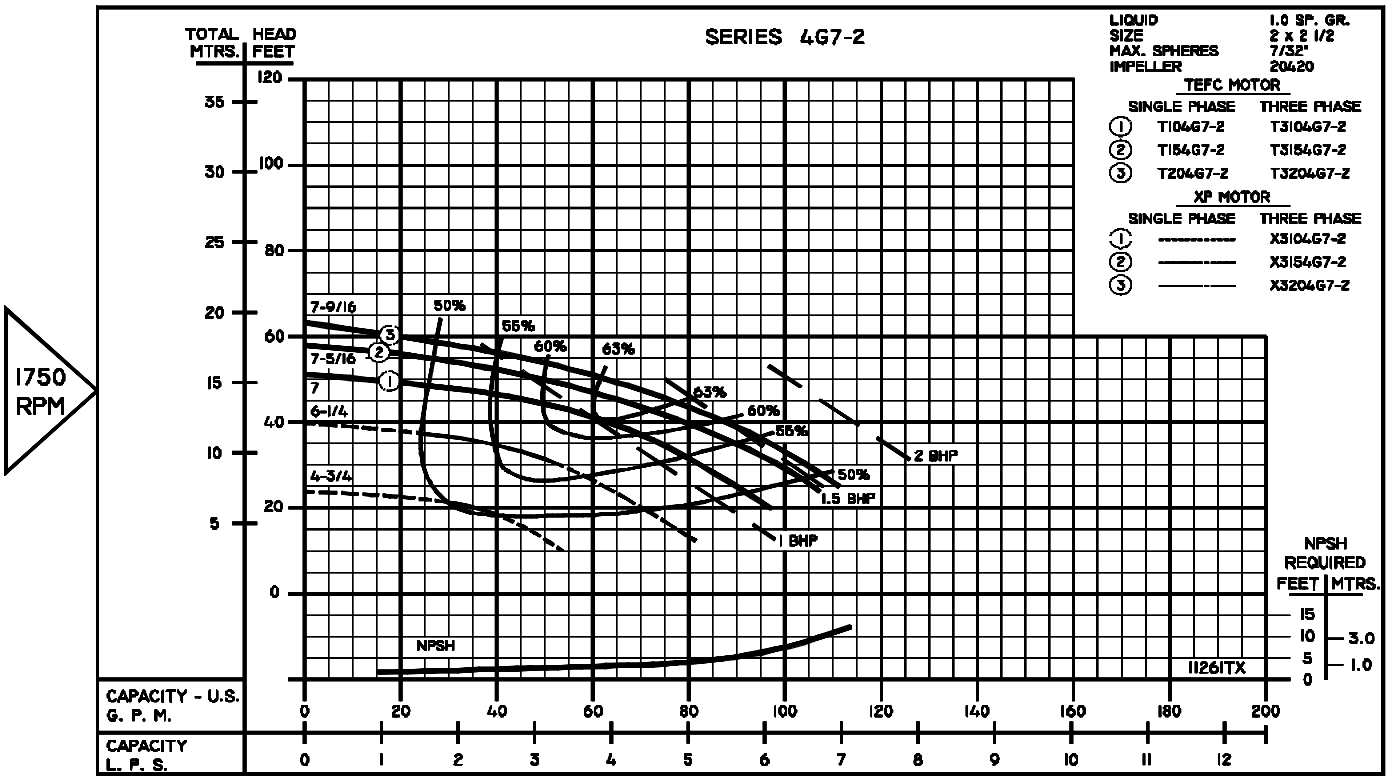

PumpAgents.com - buy pumps and parts online

www.PumpAgents.com

burks pumps®
420 Third Street
Piqua, Ohio 45356-0603

60HZ PERFORMANCE CURVE

SECTION	2B
PAGE	29
ISSUED	2/03
REPLACES	12/01

END SUCTION CENTRIFUGAL PUMPS

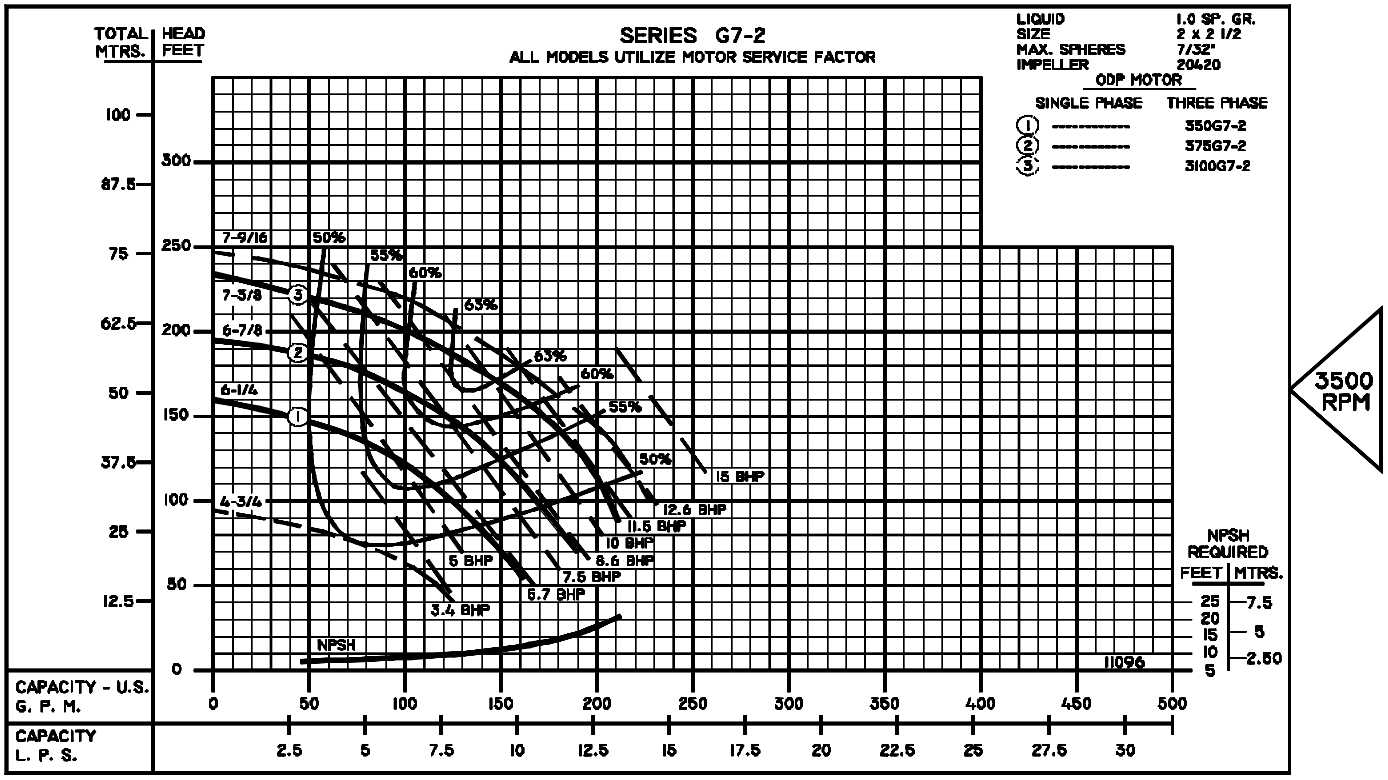

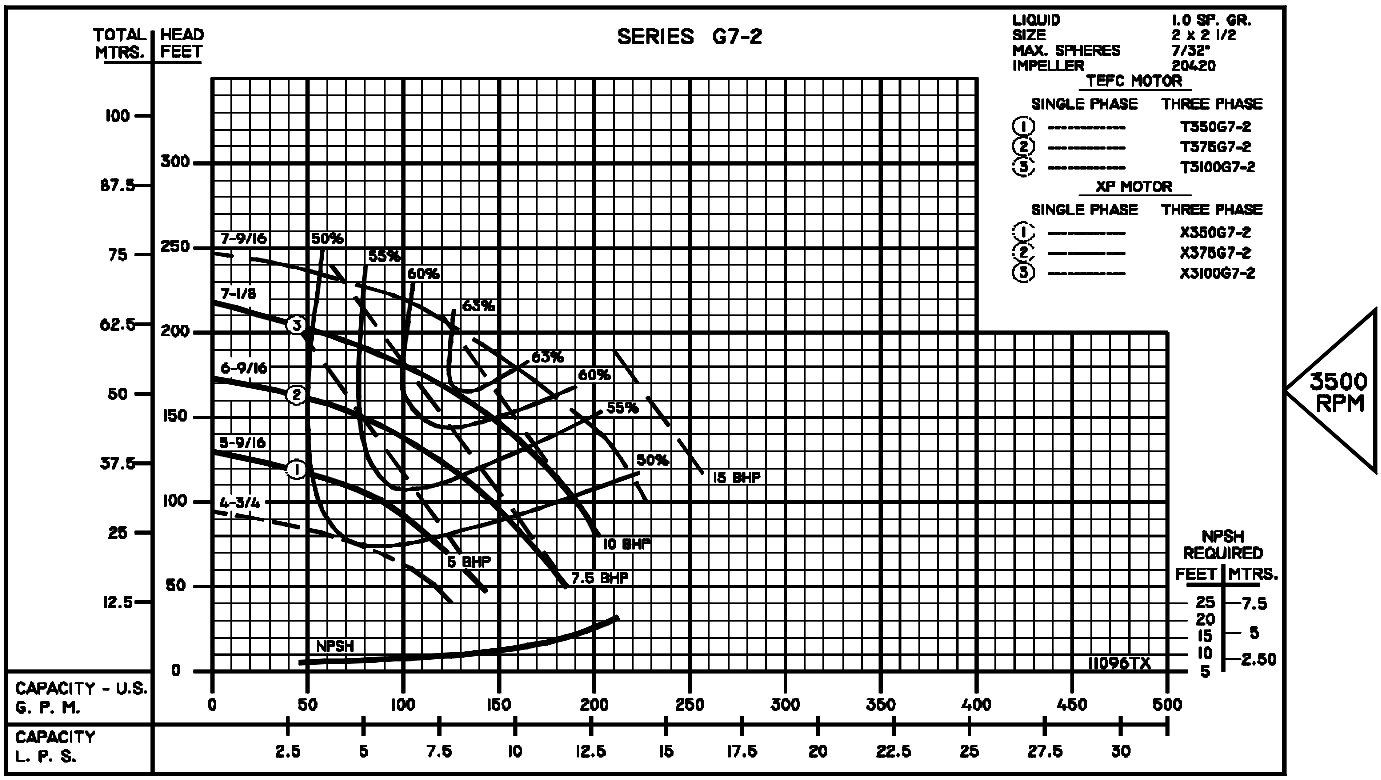

PumpAgents.com - buy pumps and parts online

www.PumpAgents.com

CCCP-28

1 - MOTORS			
RPM & PHASE	PART NUMBER	HP	FRAME SIZE
OPEN DRIP PROOF			
1750 RPM Single Phase (ODP)	21393	1	143JM
	21394	1-1/2	145JM
	21395	2	182JM
	21396	3	184JM
1750 RPM Three Phase (ODP)	21419	1	143JM
	21420	1-1/2	145JM
	21421	2	145JM
	21422	3	182JM
3500 RPM Single Phase (ODP)	09902	5	184JM
	21850	7-1/2	213JM
3500 RPM Three Phase (ODP)	09906	5	182JM
	09907	7-1/5	184JM
	09999	10	213JM
	20002	15	215JM
	21169	20	254JM
	21170	25	256JM
	21207	30	284JM
TOTALLY ENCLOSED			
1750 RPM Single Phase (TEFC)	21399	1	143JM
	21400	1-1/2	145JM
	21401	2	182JM
	21402	3	184JM
	21403	5	213JM
1750 RPM Three Phase (TEFC)	21426	1	143JM
	21427	1-1/2	145JM
	21428	2	145JM
	21429	3	182JM
	21430	5	184JM
3500 RPM Three Phase (TEFC)	09950	5	184JM
	09951	7-1/2	231JM
	20000	10	215JM
	20003	15	254JM
	21195	20	256JM
	21457	25	284JM
	21215	30	286JM
EXPLOSION PROOF			
1750 RPM Three Phase (XP)	21433	1	143JM
	21434	1-1/2	145JM
	21435	2	145JM
	21436	3	182JM
	21437	5	184JM
3500 RPM Three Phase (XP)	09954	5	184JM
	09955	7-1/2	213JM
	20001	10	215JM
	20004	15	254JM
	21196	20	256JM
	21458	25	284JM
	21218	30	286JM

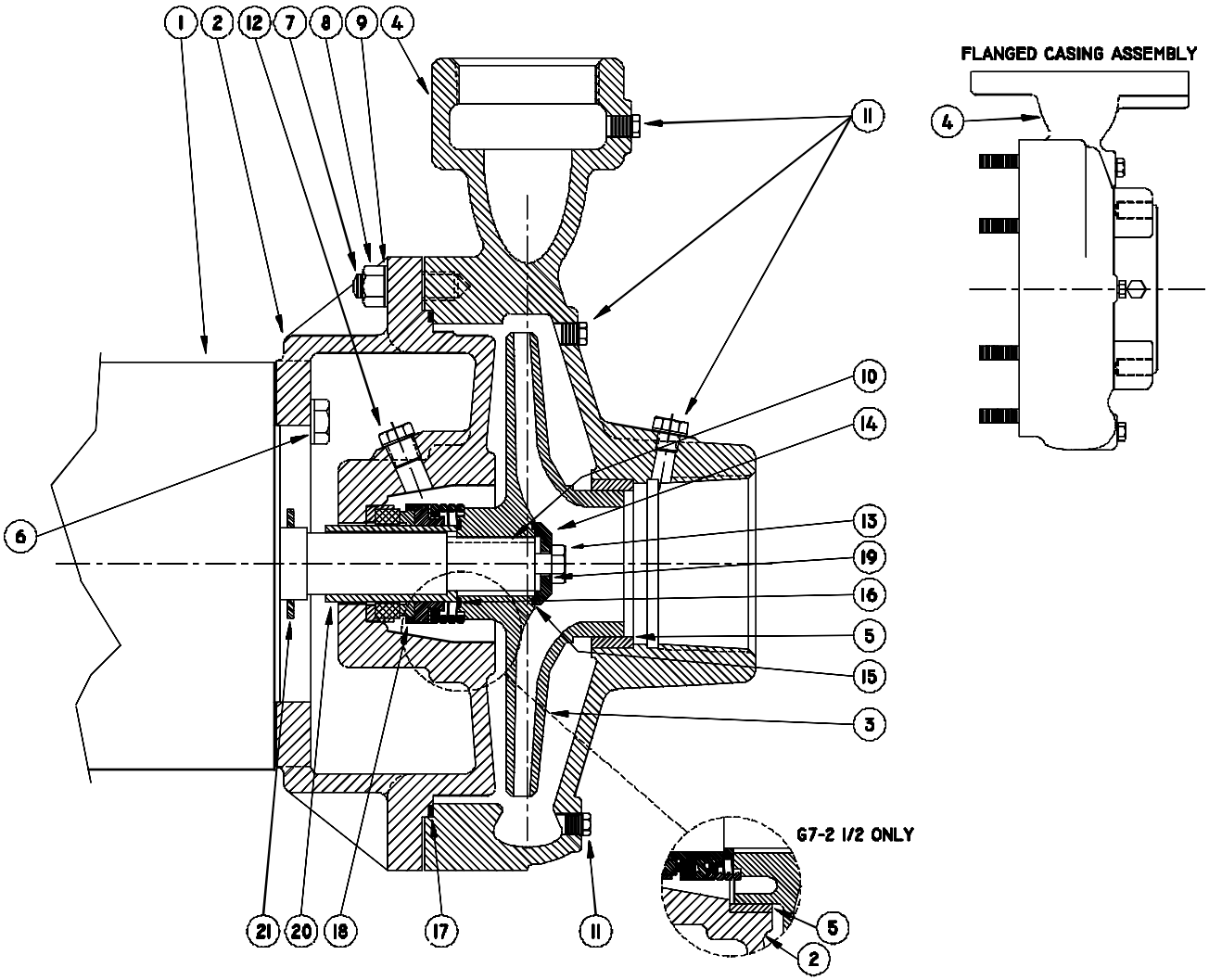

SERIES: G7-2, G7A-2 & G7-2-1/2 CENTRIFUGAL PUMPS

File: G7-200.dwg

PumpAgents.com - buy pumps and parts online

SYMBOL NUMBER	PART NUMBER	QUANTITY	DESCRIPTION
2	20650	1	Adapter - 143-184 JM Motors
	20419	1	Adapter - 213-215 JM Motors
	21086	1	Adapter Assy. ★ - 254-256 JM Motors
	21310	1	Adapter Assy. ★ - 284-286 JM Motors
3	**1750 RPM**		
	20420-7.00	1	Impeller - 104G7-2 & 3104G7-2
	20420-7.56	1	Impeller - 154G7-2 & 3154G7-2
	20421-6.56	1	Impeller - 104G7A-2 & 3104G7A-2
	20421-7.06	1	Impeller - 154G7A-2 & 3154G7A-2
	20421-7.63	1	Impeller - 204G7A-2 & 3204G7A-2
	21087-1-6.13	1	Impeller - 154G7-2-1/2 & 3154G7-2-1/2
	21087-1-6.50	1	Impeller - 204G7-2-1/2 & 3204G7-2-1/2
	21087-1-7.25	1	Impeller - 304G7-2-1/2 & 3304G7-2-1/2
	3500 RPM		
	20420-6.25	1	Impeller - 50G7-2 & 350G7-2
	20420-6.88	1	Impeller - 375G7-2
	20420-7.38	1	Impeller - 3100G7-2
	20420-7.56	1	Impeller - 3150G7-2
	20420-1	1	Impeller - 254JM Motor
	20421-5.81	1	Impeller - 50G7A-2 & 350G7A-2
	20421-6.31	1	Impeller - 375G7A-2
	20421-6.75	1	Impeller - 3100G7A-2
	20421-7.56	1	Impeller - 3150G7A-2
	20421-1-7.63	1	Impeller - 3200G7A-2
	21087-6.75	1	Impeller - 3200G7-2-1/2
	21087-7.38	1	Impeller - 3250G7-2-1/2
	21087-7.56	1	Impeller -
* 4	22153	1	Casing Assy. - G7-2 & G7A-2
	22271	1	Casing Assy. - G7-2F & G7A-2F (Flanged)
	22154	1	Casing Assy. - G7-2-1/2
	22272	1	Casing Assy. - G7-2-1/2F (Flanged)
5	09915	1	Wear Ring - G7-2 & G7A-2
	20680	2	Wear Ring - G7-2-1/2
6	04235	4	Cap Screw - Use with 20650 Adapter
	1-68-6	4	Cap Screw - Use with 20419 & 21086 Adapter
	21289	4	Cap Screw - Use with 21310 Adapter

SYMBOL NUMBER	PART NUMBER	QUANTITY	DESCRIPTION
7	20424	8	Stud
8	15-6-6	8	Nut
9	20059	8	Washer
10	23014	1	Key - 143-215 JM Motors
	22107	1	Key - 254-286 JM Motors
11	01691-A	6	Pipe Plug 1/8", Bronze
12	04236	1	Pipe Plug 1/4", Bronze
13	1-529-1	1	Cap Screw, S.S. - 143-215 JM Motors
	01638-A	1	Cap Screw, S.S. - 254-286 JM Motors
14	22105-C	1	Washer - Bronze - 143-215 JM Motors
	22106	1	Washer - Bronze - 254-286 JM Motors
+ 15	**PUMPS With 143-215 JM Motors**		
	09933	1	Flat Gasket +
	22083	1	O-Ring Gasket - Buna N (Std)
	22084	1	O-Ring Gasket - Viton
	22094	1	O-Ring Gasket - EPT**
	22085	1	O-Ring Gasket - Teflon
	PUMPS With 254-286 JM Motors		
	21090	1	Flat Gasket +
	22140	1	O-Ring Gasket - Buna N (Std)
	22141	1	O-Ring Gasket - Viton
	22143	1	O-Ring Gasket - EPT**
	22142	1	O-Ring Gasket - Teflon
+ 16	**PUMPS With 143-215 JM Motors**		
	09911	1	Flat Gasket +
	22083	1	O-Ring Gasket - Buna N (Std)
	22084	1	O-Ring Gasket - Viton
	22094	1	O-Ring Gasket - EPT**
	22085	1	O-Ring Gasket - Teflon
	PUMPS With 254-256 JM Motors		
	21092	1	Flat Gasket +
	22089	1	O-Ring Gasket - Buna N (Std)
	22090	1	O-Ring Gasket - Viton
	22096	1	O-Ring Gasket - EPT**
	22091	1	O-Ring Gasket - Teflon

"CONTINUED ON NEXT PAGE"

SERIES: G7-2, G7A-2 & G7-2-1/2
*Casing Assy. includes Symbols 4, 9 & 14. ** For hot water or caustic service
+ Series G7-2, G7A-2 & G7-2-1/2 pumps have been manufactured with either flat or O ring type gaskets. Determine which type is required before ording. When in doubt, order flat gaskets.
★ Adapter Assy. includes symbol 5.

PumpAgents.com - buy pumps and parts online

CCCP-30

SYMBOL NUMBER	PART NUMBER	QUANTITY	DESCRIPTION
+ 17	20418	1	Flat Gasket +
	23003	1	O-Ring Gasket - Buna N (Std)
	23004	1	O-Ring Gasket - Viton
	23005	1	O-Ring Gasket - EPT**
	23006	1	O-Ring Gasket - Teflon
18	PUMPS With 143-215 JM Motors		
	09917	1	Mechanical Seal - Buna N (Std)
	09926	1	Mechanical Seal - Viton
	21271	1	Mechanical Seal - EPT **
	PUMPS With 254-256 JM Motors		
	21136	1	Mechanical Seal - Buna N (Std)
	21189	1	Mechanical Seal - Viton
	21721	1	Mechanical Seal - EPT **
19	PUMPS With 143-215 JM Motors		
	22080	1	O-Ring Gasket - Buna N (Std)
	2-31005-012	1	O-Ring Gasket - Viton
	22093	1	O-Ring Gasket - EPT**
	22082	1	O-Ring Gasket - Teflon
	PUMPS With 254-256 JM Motors		
	22086	1	O-Ring Gasket - Buna N (Std)
	22087	1	O-Ring Gasket - Viton
	22095	1	O-Ring Gasket - EPT**
	22088	1	O-Ring Gasket - Teflon
20	22063-C	1	Shaft Sleeve, Bronze - 143-215 JM Motors
	22066	1	Shaft Sleeve, Bronze - 254-286 JM Motors
21	09918	1	Slinger Washer - 143-215 JM Motors
	21093	1	Slinger Washer - 254-286 JM Motors
DIFFERING PARTS FOR ALL BRONZE CONSTRUCTION			
2	20650-A	1	Adapter - 143-184 JM Motors
	20419-B	1	Adapter - 213-215 JM Motors
	21086-A	1	Adapter Assy. ★ - 254-256 JM Motors
	21310-A	1	Adapter Assy. ★ - 284-286 JM Motors
* 4	22153-A	1	Casing Assy. - G7-2 & G7A-2
	22271-A	1	Casing Assy. - G7-2F & G7A-2F (Flanged)
	22154-A	1	Casing Assy. - G7-2-1/2
	22272-A	1	Casing Assy. - G7-2-1/2F (Flanged)
13	03289	1	Cap Screw, Bronze - 143-215 JM Motors
	01638-B	1	Cap Screw, Bronze - 254-286 JM Motors

SYMBOL NUMBER	PART NUMBER	QUANTITY	DESCRIPTION
DIFFERING PARTS FOR ALL IRON CONSTRUCTION			
2	21086-B	1	Adapter Assy. ★ - 254-256 JM Motors
	21310-B	1	Adapter Assy. ★ - 284-286 JM Motors
3	20420-A	1	Impeller - Iron
	20421-A	1	Impeller - Iron
	20421-A1	1	Impeller - Iron
	21087-A	1	Impeller - Iron
	Size Suffixes Same As Standard Bronze Impellers		
6	03288	4	Cap Screw - for 20650-A Adapter
	01638-B	4	Cap Screw - for 20419-B & 21086-A Adapter
8	03160-A	8	Nut
* 4	22153-B	1	Casing Assy. - G7-2 & G7A-2
	22271-B	1	Casing Assy. - G7-2F & G7A-2F (Flanged)
	22154-B	1	Casing Assy. - G7-2-1/2
	22272-B	1	Casing Assy. - G7-2-1/2F (Flanged)
5	09915-A	1	Wear Ring, Steel - G7-2 & G7A-2
	20680-A	2	Wear Ring, Steel - G7-2-1/2
11	00158	6	Pipe Plug 1/8", Steel
12	04236-A	1	Pipe Plug 1/4", S.S.
14	22105-A	1	Washer - Steel - 143-215 JM Motors
	22106-A	1	Washer - Steel - 254-286 JM Motors
20	22063-A	1	Shaft Sleeve, S.S. - 143-215 JM Motors
	22066-A	1	Shaft Sleeve, S.S. - 254-286 JM Motors

SERIES: G7-2, G7A-2 & G7-2-1/2
*Casing Assy. includes Symbols 4, 9 & 14.
** For hot water or caustic service
+ Series G7-2, G7A-2 & G7-2-1/2 pumps have been manufactured with either flat or O ring type gaskets. Determine which type is required before ording. When in doubt, order flat gaskets.
★ Adapter Assy. includes symbol 5.

For technical advice or service please take your pump into your local pump service center.
To order pump or parts or for pricing please go to the following links :
Burks Pumps Home >>
Burks Pumps stock list >>